YAMAHA

User Guide

Wireless Streaming Pre-Amplifier

WXC-70A

EN

TABLE OF CONTENTS

READ THIS FIRST 5

Features of this product 5
About the manuals 7
Safety precautions 8

CHECKING THE ACCESSORIES AND PREPARING THE REMOTE CONTROL 9

Checking the accessories 9
Preparing the remote control 10

NAMES OF PARTS AND THEIR FUNCTIONS 11

Front panel 11
Rear panel 13
Information display 16
Remote control 18

CONNECTIONS 20

Connecting powered speakers or an external amplifier 20
- Mode settings 20
- Connect using analog 22
- Connect using digital 24

Connecting a subwoofer 25
Connecting a TV 26
Connecting an audio device 28
Connecting an infrared receiver (remote connection) 29
Connecting to a network 30
Connecting the power cord 31

INSTALLING AND SETTING UP THE APP 32

Setting up MusicCast 32

Automatic adjustment of speaker settings (YPAO) 35

What is YPAO? 35

Error and warning messages 37

Checking YPAO measurements and changing settings 38

BASIC OPERATION 39

Turning the power on/off (Standby) 39

Selecting an input source 41

Adjusting the volume 43

PLAYBACK 45

Listening to TV audio on this product 45

Playing audio from an external audio device 46

Playing audio from a Bluetooth® device 47

Playing music files from a USB flash drive 49

Listening to music via AirPlay 51

Listening to music via Google Cast™ 52

Playing songs on a media server (PC/NAS) 53

Listening to Internet radio 54

Listening to podcasts 55

Listening to streaming services 56

Listening to audio from other MusicCast devices 57

USEFUL FUNCTIONS 58

Preset function 58

SETTINGS 60

Settings overview 60

Initializing and resetting the product 63

FIRMWARE UPDATE 65

Updating the firmware using the app 65

Updating the firmware using a USB flash drive **66**

TROUBLESHOOTING 68

Before assuming a malfunction **68**

If you suspect a malfunction, check the following points first 68
Problems with power, system, and/or remote control 69
Problems with the audio 71
Problems with TV connections (HDMI) 73
Problems with Bluetooth 74
Problems with USB 75
Problems with network 76

Error display **79**

After-Sales Service **80**

SPECIFICATIONS 81

Supported devices and formats **81**

Supported Bluetooth devices 81
Supported USB devices 82
Playable file formats (Network/USB) 83

Trademarks and licenses **84**

Specifications **86**

About network functions **90**

Other network functions 90
How to disable wireless functions 92

READ THIS FIRST

Features of this product

Thank you very much for purchasing this Yamaha product.

The WXC-70A is a Wireless Streaming Pre-Amplifier designed for use by connecting to a TV or smartphone. With intuitive operation and convenient connectivity, it lets you enjoy refined sound to your heart's content.

■ Supports a wide range of input sources

This product supports playback from a variety of input sources.

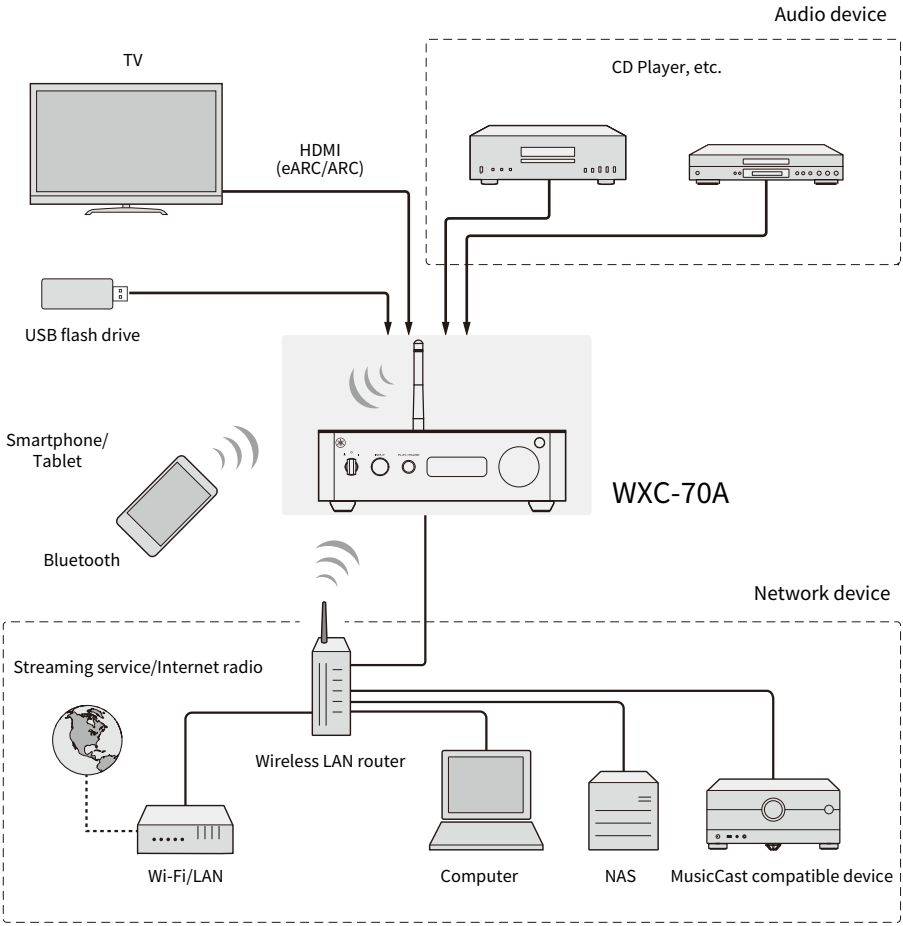

■ Compatibility with MusicCast

This product is compatible with MusicCast.

Dedicated MusicCast app: “MusicCast Controller”

- With this app, you can easily enjoy music from smartphones, media servers (PC/NAS), Internet radio, and streaming services from anywhere in the home. You can also share music with MusicCast-compatible devices located in different rooms.
- For details on MusicCast and compatible devices, please visit the Yamaha website.
  http://www.yamaha.com/musiccast/
- For more information about the app, search “MusicCast Controller” in the App Store or Google Play.

NOTE

The “MusicCast Controller” app is required for initial setup and for changing various settings of this product.

About the manuals

To ensure safe and proper use of this product, three types of manuals are provided (Safety Guide, Quick Guide, and User Guide). Please be sure to read each of the manuals that came with the product and store them in an easily accessible location for future reference.

Types of manuals

Safety Guide (included)

Explains important safety precautions required for using this product. Be sure to read this manual before use.

Quick Guide (included)

Explains the basic connections and operations to help you start using the product right after purchase.

User Guide (this guide)

Explains the main features and settings of the product. Also includes troubleshooting and firmware update explanations. This guide is available only on the website.

Cautions and other information in this guide are classified as follows:

Notation	Meaning
CAUTION	Indicates information related to possible injury.
NOTICE	Indicates information that helps prevent product failure, damage, malfunction, or data loss, and ensures environmentally friendly use.
NOTE	Provides usage tips, limitations, and helpful supplementary information.

NOTE

- This guide describes the latest specifications available at the time of publication.
- The latest versions (PDF) of all guides (manuals) can be downloaded from the following website.
  https://download.yamaha.com/

Safety precautions

Be sure to read the Safety Guide before using this product. Also observe the following precautions.

CAUTION

- To prevent hearing damage, be sure to observe the following points.
  - Do not listen at high volume levels for long periods.
  - Lower the volume temporarily before switching input sources.
  - Avoid sudden increases in volume.
    When operating the product from a smartphone or tablet, the volume may change suddenly. Adjust the volume carefully.

This product includes the following volume control features. You can configure these settings using the "MusicCast Controller" app.

- Maximum Volume
  Sets an upper limit for the output volume.
  "Settings overview" (p.60)
- Initial Volume
  Sets the volume level when the power is turned on.
  "Settings overview" (p.60)

CHECKING THE ACCESSORIES AND PREPARING THE REMOTE CONTROL

Checking the accessories

The product comes with the following accessories. Check and make sure that you have all of the supplied accessories.

☐ Remote control × 1

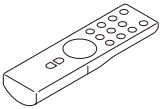

☐ Batteries (AAA, LR03, UM-4) × 2

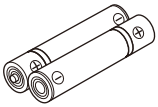

☐ YPAO microphone (6 m) × 1

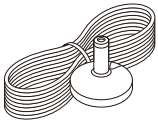

☐ Power cord (1.4 m) × 1

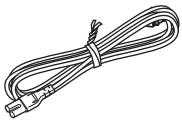

☐ Safety Guide × 1

☐ Quick Guide × 1

Preparing the remote control

Prepare the supplied remote control for use.

Inserting the batteries

Put the supplied batteries into the remote control facing the correct way (+/-).

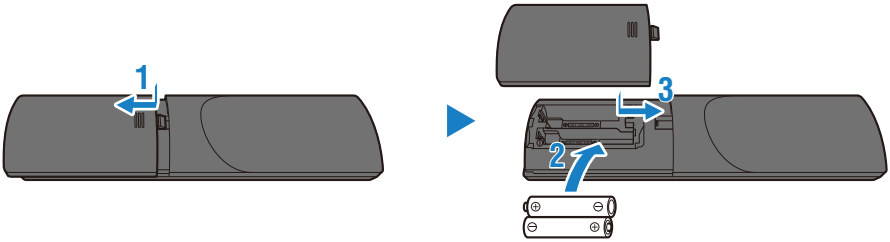

Using the remote control

The supplied remote control operates using an infrared signal. Its effective operating range is shown in the illustration below.

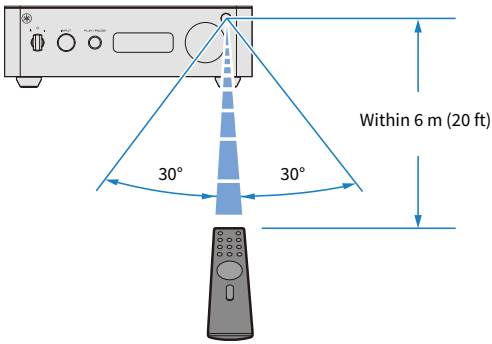

NAMES OF PARTS AND THEIR FUNCTIONS

Front panel

The following are the names of parts of the front panel and an explanation of their functions.

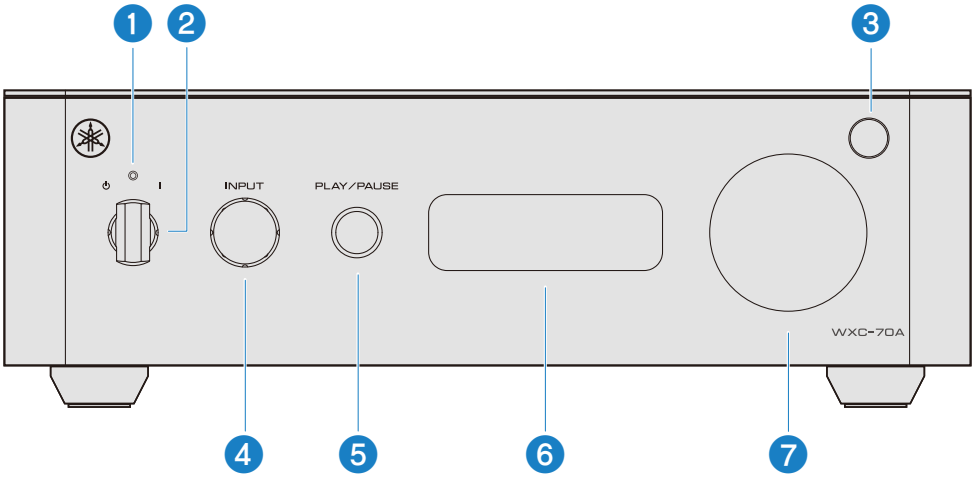

❶ Power indicator

Lights white when the power is turned on.

If the indicator flashes, the power will no longer turn on in order to protect the product. For more details, refer to the following section.

“Problems with power, system, and/or remote control” (p.69)

❷ Power switch

Turn the switch clockwise and align it with the [|] position to turn the power on. Turn the switch counterclockwise and align it with the [⏻] position to turn the power off (standby) (p.39).

When you release your hand, the switch automatically returns to the center position.

❸ Remote control signal receiver

Receives the infrared signals from the remote control (p.10).

❹ [INPUT] Input source selector knob

Turn clockwise or counterclockwise to select the input source (p.41).

❺ [PLAY/PAUSE] Playback control button

Plays or pauses content.

❻ Information display

Displays various information (p.16).

❼ **Volume knob**

Turn clockwise or counterclockwise to adjust the volume (p.43).

Rear panel

The following are the names of parts of the rear panel and an explanation of their functions.

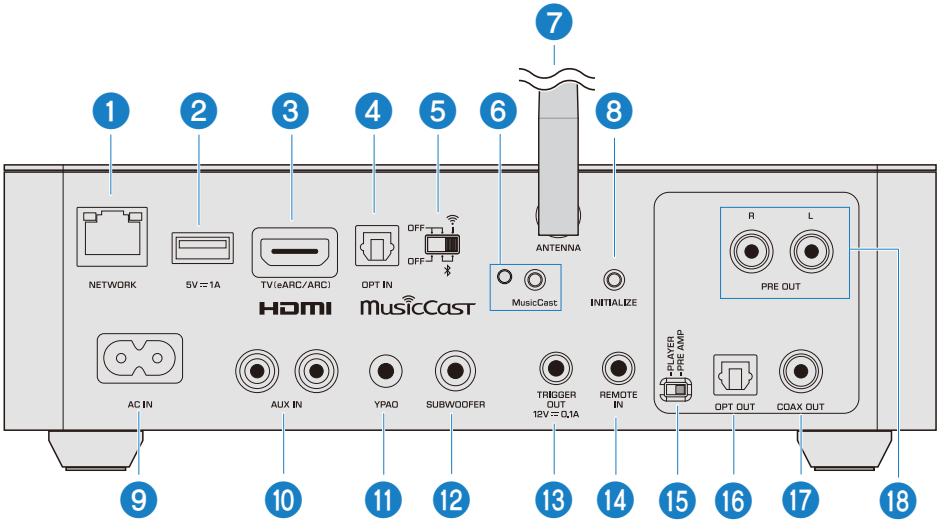

❶ **[NETWORK] jack**

For connecting a network cable when connecting this product to a wired network (p.30).

❷ **USB jack**

For connecting a USB flash drive (p.49).

❸ **[TV(eARC/ARC)] jack**

For connecting to a TV using a commercially-available HDMI cable (p.26).

❹ **[OPT IN] jack**

For connecting to external devices with an optical digital output (p.28).

❺ **Wireless switch**

Turns the wireless communication functions (wireless LAN and Bluetooth) on or off (p.92).

❻ **[MusicCast] indicator/button**

The left side in the figure is the indicator, and the right side is the button.

- The indicator flashes green while MusicCast network setup is in progress. It lights green when connected to the MusicCast network and when connected to a wired/wireless network.
- The button is used when registering this product on the MusicCast network (p.32). After launching the “MusicCast Controller” app, follow the app’s on-screen instructions.

⑦ Wireless antenna

Antenna for wireless LAN and Bluetooth (p.30, p.47).

If the wireless connection is unstable, raising the antenna may improve it.

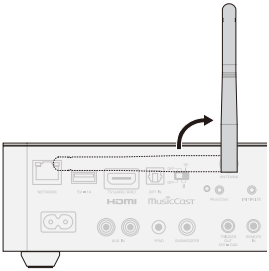

NOTICE

- Do not apply excessive force to the wireless antenna. Doing so may damage it.
- Do not remove the wireless antenna.

⑧ [INITIALIZE] button

Used to initialize the product (restore factory default settings) (p.63).

⑨ [AC IN] jack

For connecting the supplied power cord (p.31).

⑩ [AUX IN] jack

For connecting to an audio device with analog audio output (p.28).

⑪ [YPAO] microphone jack

For connecting the supplied YPAO microphone (p.35). Do not plug in commercially available microphones.

⑫ [SUBWOOFER] output jack

For connecting to a subwoofer with a built-in amplifier (p.25).

⑬ [TRIGGER OUT] jack

For connecting to an external device that supports the trigger function, such as a Yamaha subwoofer (p.25).

⑭ [REMOTE IN] jack

If an infrared receiver is connected to this jack, you can operate this product with the supplied remote control even when it is stored out of sight (p.29).

⑮ Mode switch

Switches between Player mode and Preamp mode (p.20).

⑯ [OPT OUT] jack

Connect an audio amplifier or powered speakers equipped with an optical digital audio input (p.20).

⑰ [COAX OUT] jack

Connect an audio amplifier or powered speakers equipped with a coaxial digital audio input (p.20).

⑱ **[PRE OUT] jack**

Connect an audio amplifier or powered speakers equipped with analog audio inputs (p.20).

Information display

This section explains the information shown on the information display on the front panel.

Basic display

Input source indicator

Shows the input source when the source is switched.

Example of display when the input source is switched to “TV”

Volume indicator

Shows the volume level when the volume is adjusted.

Example of display when the volume level is set to 50

Startup indicator

Shows when this product is being started up. While this is displayed, no operations other than power off (standby) are available.

Display example

MusicCast setup indicator

Displayed when the [MusicCast] button is pressed and held. It indicates that the product is ready for initial setup from the “MusicCast Controller”.

Display example

Network setup indicator

Displayed when the product is turned on after initialization. It indicates that the product is ready for initial setup from “MusicCast Controller” and Wi-Fi setup via WAC*.

Display example

* WAC (Wireless Accessory Configuration) is a function that applies the wireless settings of an iOS device to another device for wireless network connection.

Other displays

If information about the content being played is available, the station name or track name is displayed.

NOTE

Characters that cannot be displayed are shown as "□".

Brightness of the information display

- To protect the display, the brightness is adjusted automatically as follows:
  - If no operation is performed for a certain amount of time, the display dims.
  - After dimming, if there is still no operation for a certain amount of time, the display turns off.
- After dimming or turning off, performing any operation restores the display to its normal brightness.
- You can change the information display brightness and the time until the display turns off in the setup menu.

Related links

"Settings overview" (p.60)

Remote control

The following are the names of the parts of the included remote control and explanations of their functions.

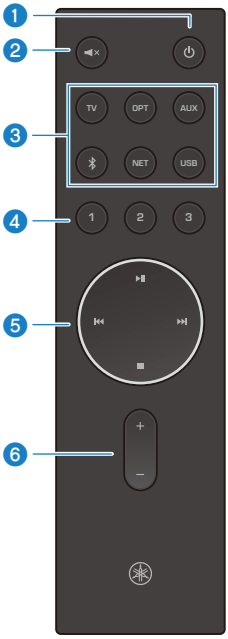

1 **[⏻] Power key**

Turns the product on or off (standby mode) (p.39).

2 **[🔇×] Mute key**

Mutes the sound. Pressing it again returns the volume to its original level (p.43).

3 **Input source selection keys**

Selects the input source to play (p.41).

NOTE

The [NET] key cycles through network sources in sequence each time it is pressed.

4 **[1] [2] [3] keys**

Used to register and recall your favorite Internet radio stations and network content (p.58).

❺ Playback control keys

[▶II] Toggles between play and pause.

[I◀◀] Goes to the beginning of the current track or to the previous track.

When the input source is set to “Server” or “USB”, press and hold for more than 2 seconds to fast-reverse.

[▶▶I] Skips to the next track.

When the input source is set to “Server” or “USB”, press and hold for more than 2 seconds to fast-forward.

[■] Stops playback.

❻ [+] [−] keys

Adjusts the volume. Pressing [＋] increases the volume, and pressing [－] decreases the volume (p.43).

CONNECTIONS

Connecting powered speakers or an external amplifier

Mode settings

Configure settings to connect powered speakers or an audio amplifier to this product.

■ Check the following points in advance

This product has the following two modes available.

[PRE AMP] mode

This mode uses the WXC-70A as a pre-amp. Use this mode in situations such as the following.

- When adjusting the volume on the WXC-70A
- When using YPAO (an analog connection is needed)
- When connecting a device that does not have a volume adjustment function, such as a power amplifier

[PLAYER] mode

This mode uses the WXC-70A as a player. Use this mode in situations such as the following.

- When adjusting the volume on the connected device such as a pre-amp
- When using the unit as an input device for a Hi-Fi amplifier, etc.

Refer to the following table and choose a mode to use. Then, set the Mode switch on the rear panel.

Details of each mode

Mode	Device on which volume is adjusted	Connection method	YPAO	Output signal restrictions
[PRE AMP]	WXC-70A	Analog	Can be used	No restrictions
		Digital	Cannot be used	Some restrictions*2
[PLAYER]	Connected devices*1	Analog		
		Digital		

*1 The device must have a volume adjustment function.

*2 The following functions are not applied to any of the audio signals output from each of the [PRE OUT], [OPT OUT], and [COAX OUT] jacks.
- Tone Control
- Dialogue level
- Monaural downmix

CAUTION

- When set to [PLAYER] mode, the volume adjustment of the WXC-70A will not work, so be sure to connect a device that has a volume-control function. Connecting a device without a volume control function will cause playback that is always at the maximum volume level and may result in hearing damage.

■ Setting the Mode switch

Set the Mode switch on the rear panel to the mode that you will use.

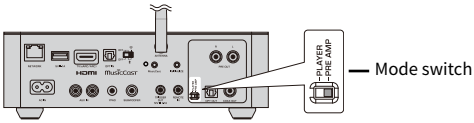

[PRE AMP] mode	[PLAYER] mode
Set the switch to the [PRE AMP] position.	Set the switch to the [PLAYER] position.
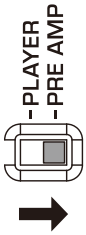	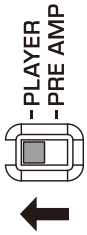

NOTE

Turn off the power (standby) before changing the switch setting. Changing the switch setting while the power is on does not apply the setting. The setting is applied the next time the power is turned on.

Related links

- “Connect using analog” (p.22)
- “Connect using digital” (p.24)

Connect using analog

Connect powered speakers or an audio amplifier to this product using analog.

Required cables

Obtain a commercially-available stereo pin cable (RCA).

Connection method

Use a stereo pin cable (RCA) to connect powered speakers or an audio amplifier to the [PRE OUT] jack of this product.

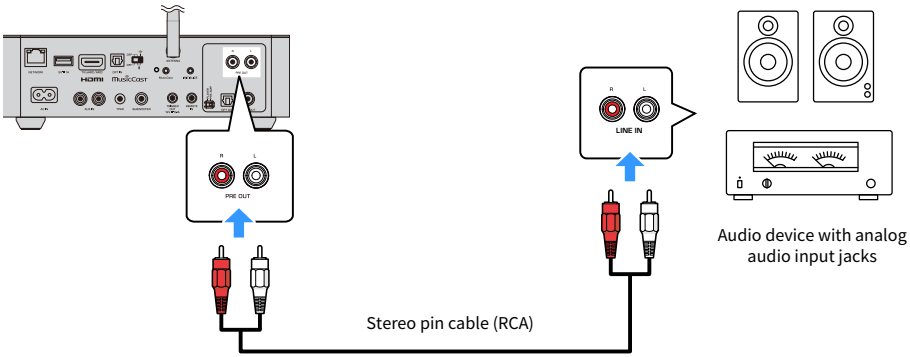

After connecting, be sure to confirm that the Mode switch setting is suitable for your intended use.

■ Connecting a Yamaha Hi-Fi Amplifier (A-S series)

When a Yamaha Hi-Fi amplifier (A-S series) is connected as shown in the figure below, the amplifier turns on or enters standby in conjunction with this product.

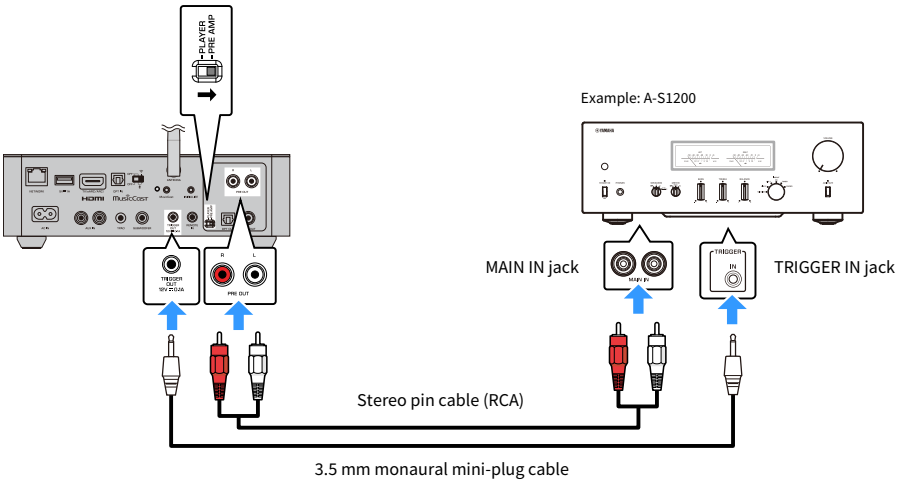

NOTE

- In this example, set the Mode switch to [PRE AMP] and adjust the volume on the WXC-70A.
- For details on the trigger function, refer to the owner's manual for the A-S series amplifier.

Related links

"Mode settings" (p.20)

Connect using digital

Connect powered speakers or an audio amplifier to this unit using digital.

■ For a digital connection

Required cables

Obtain a commercially available optical digital cable or coaxial digital cable.

Connection method

When using an optical digital cable, connect powered speakers or an audio amplifier to the [OPT OUT] jack of this product. When using a coaxial digital cable, connect it to the [COAX OUT] jack.

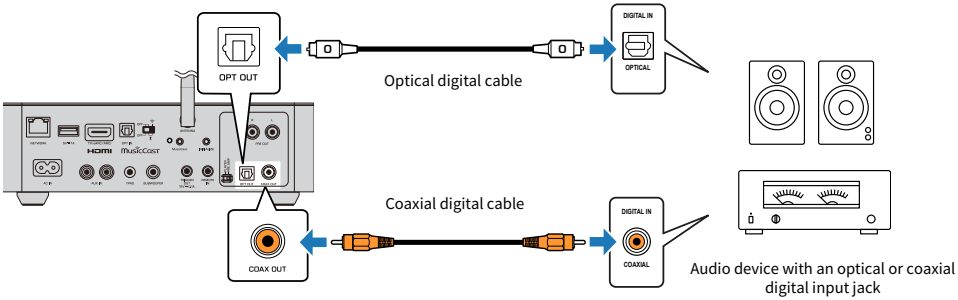

After connecting, be sure to confirm that the Mode switch setting is suitable for your intended use.

Related links

“Mode settings” (p.20)

Connecting a subwoofer

You can connect an active subwoofer (with built-in amplifier) to this product. Using a subwoofer allows you to enjoy more powerful and dynamic low-frequency sound.

Required cables

Obtain a commercially-available monaural pin cable (RCA) or one supplied with the subwoofer.

Connection method

Use a monaural pin cable (RCA) to connect the subwoofer to the [SUBWOOFER] jack on this product.

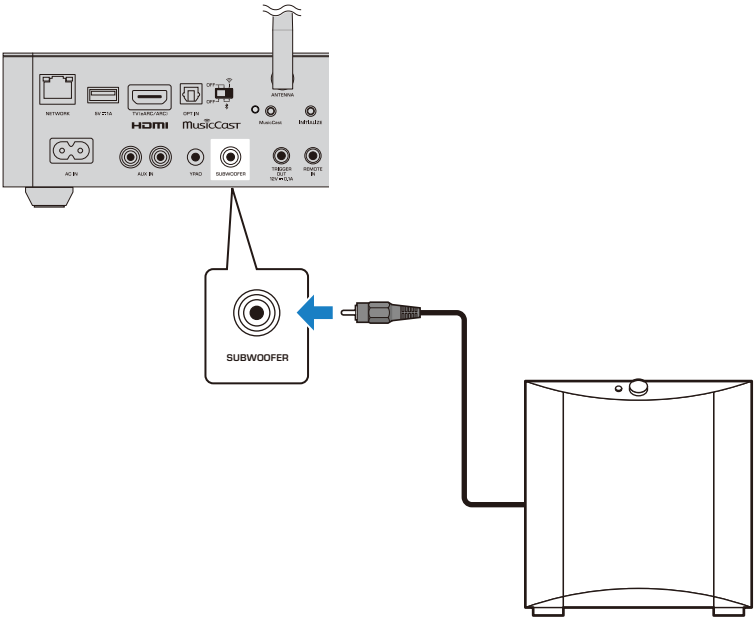

NOTE

Yamaha subwoofers that support system connections can be synchronized to the power on/off of this product using the trigger function. Use a commercially available 3.5 mm monaural mini-plug cable to connect the [TRIGGER OUT] jack of this product to the subwoofer. The subwoofer power then turns on/off in conjunction with this product being turned on or placed in standby. For more details, refer to the user's manual of the subwoofer.

Related links

“Automatic adjustment of speaker settings (YPAO)” (p.35)

Connecting a TV

You can connect a TV that supports eARC/ARC to this product. This allows you to play the TV's audio through the speakers of this product. You can also link the power of the TV and this product for synchronized on/off control.

Required cables

Obtain a commercially-available HDMI cable (19-pin).

About HDMI cables

- Select one of the following commercially available HDMI cables (HDMI-certified).
  - High Speed HDMI Cable with Ethernet
  - Premium High Speed HDMI Cable with Ethernet
  - Ultra High Speed HDMI Cable
  - Ultra96 HDMI Cable

Connection method

Use the HDMI cable to connect the [TV(eARC/ARC)] jack on this product to the TV's HDMI input jack.

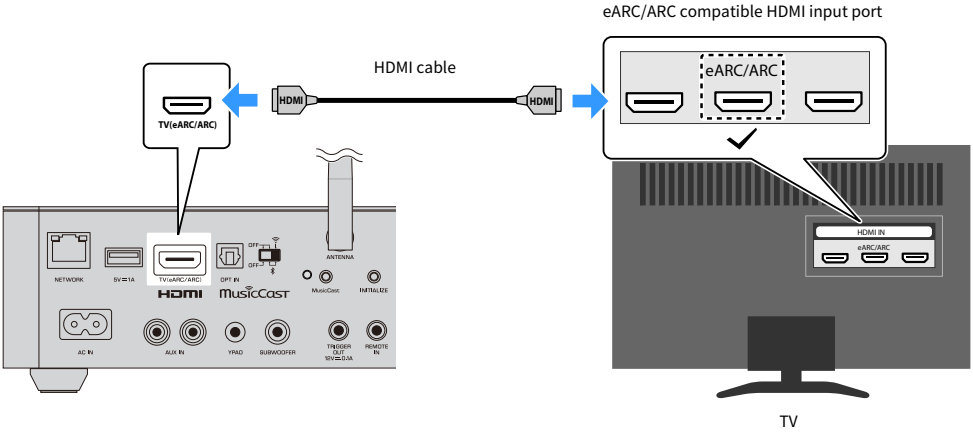

NOTE

- Connect to an HDMI input jack on the TV labeled with either "eARC/ARC" or "ARC".
- Only 2-channel PCM audio signals can be played on this product through the [TV(eARC/ARC)] jack.
- If the TV does not have an HDMI jack labeled "eARC/ARC" or "ARC", use an optical digital connection or analog connection. "Connecting an audio device" (p.28)

About the TV's HDMI jacks

Depending on the HDMI jack on the TV, settings on the TV side may be required. For details, refer to the following table and the user's manual for the TV.

TV HDMI jack	Required TV settings and other details
HDMI (eARC/ARC) Includes eARC/ARC label.	If you connect this product to an HDMI jack that is labeled “eARC/ARC”, ensure that the settings of the TV are as follows: • Set the TV’s audio output destination to an external device (this product), not the TV’s internal speakers. • Set eARC to On, if the setting is available. • Set HDMI Control to On if you want to synchronize the power on/off operation of this product and the TV. • Set the audio format output via eARC/ARC to 2-channel PCM.
HDMI (ARC) Includes ARC label only.	If you connect this product to an HDMI jack that is only labeled “ARC”, configure the following settings on the TV. • Set the TV’s audio output destination to an external device (this product), not the TV’s internal speakers. • Set HDMI Control to On. • Set the audio format output via ARC to 2-channel PCM.
HDMI Without eARC or ARC labels.	• If you connect this product to an HDMI jack without “eARC/ARC” or “ARC” labeling, TV audio cannot be played back through this product. Connect to an HDMI jack labeled “eARC/ARC” or “ARC”. Alternatively, use an optical digital connection or analog connection instead. “Connecting an audio device” (p.28)

Connecting an audio device

This explains how to connect an audio device to the product. Two types of connections are available: optical digital or analog.

Required cables

For optical digital connection

Obtain a commercially-available optical digital cable.

For analog connection

Obtain a commercially-available stereo pin cable (RCA).

Connection method

For a digital connection, use an optical digital cable to connect the audio device to the [OPT IN] jack on this product.

For an analog connection, use a stereo pin cable (RCA) to connect the audio device to the [AUX IN] jack on this product.

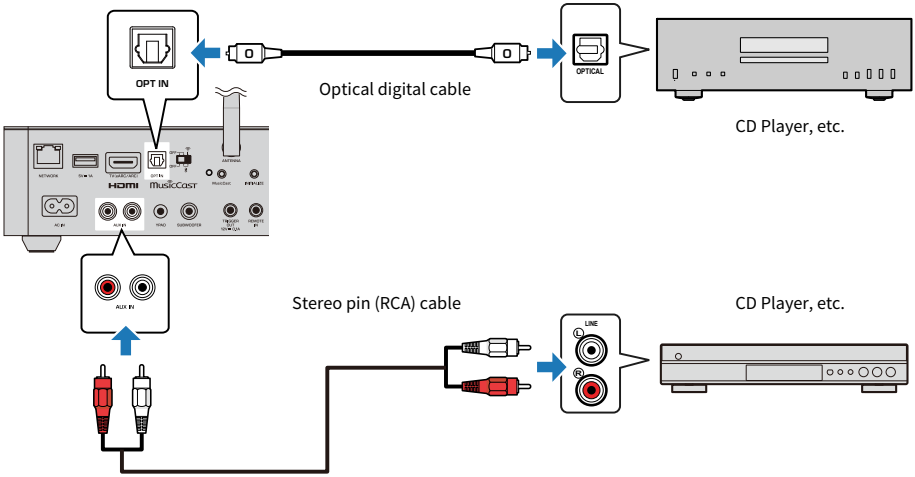

Connecting an infrared receiver (remote connection)

By connecting a commercially available infrared receiver to the [REMOTE IN] jack of this product, you can operate this product with the remote control even when it is installed in a location where the remote control signal cannot reach it.

Required device and cable

Obtain a commercially-available infrared receiver and a cable for connecting the device. The [REMOTE IN] jack of this product supports a 3.5 mm monaural mini plug.

Connection method

Connect the infrared receiver to the [REMOTE IN] jack of this product.

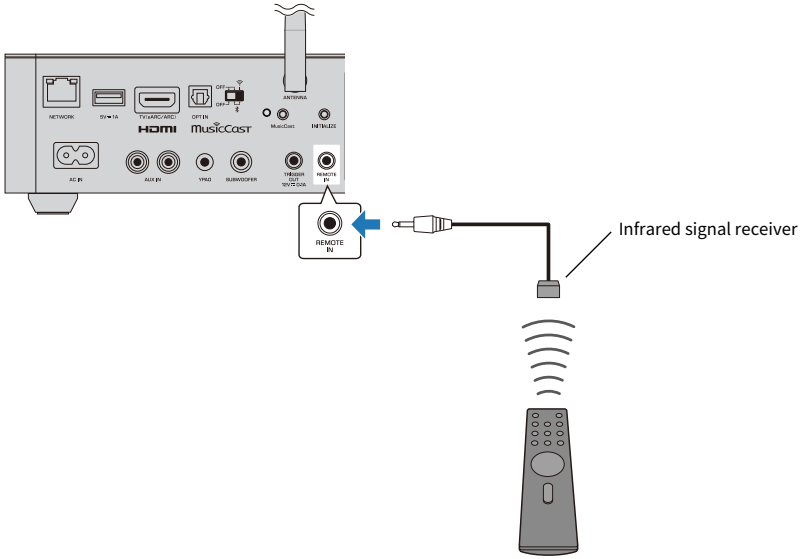

Connecting to a network

This product supports both wireless and wired network connections. Select the connection method suiting your network environment.

■ Connection method

Wireless network connection

When using a wireless connection, setup is performed using the “MusicCast Controller” app, so no prior preparation is required. For more details, refer to the following section.

“Setting up MusicCast” (p.32)

Wired network connection

To make a wired connection, use a commercially available network cable to connect this product to your router. Connect the network cable to the [NETWORK] jack on this product.

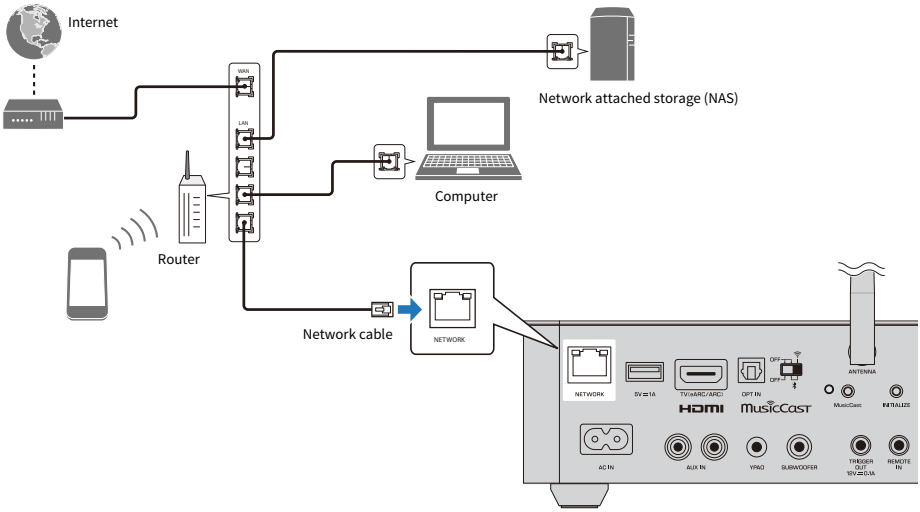

NOTICE

- Do not connect this product to a public Wi-Fi and/or Internet service directly. Only connect this product to the Internet through a router with strong password protections. Consult your router manufacturer for information on optimum security practices.

NOTE

To prevent electromagnetic interference, use an STP (Shielded Twisted Pair) cable of Category 5e (CAT5e) or higher with a straight configuration for the network cable.

Connecting the power cord

After completing all device connections, connect the included power cord.

Required cables

Use the included power cord.

Connection method

Connect the power cord to the [AC IN] jack on this product, and then plug the power plug into an AC outlet.

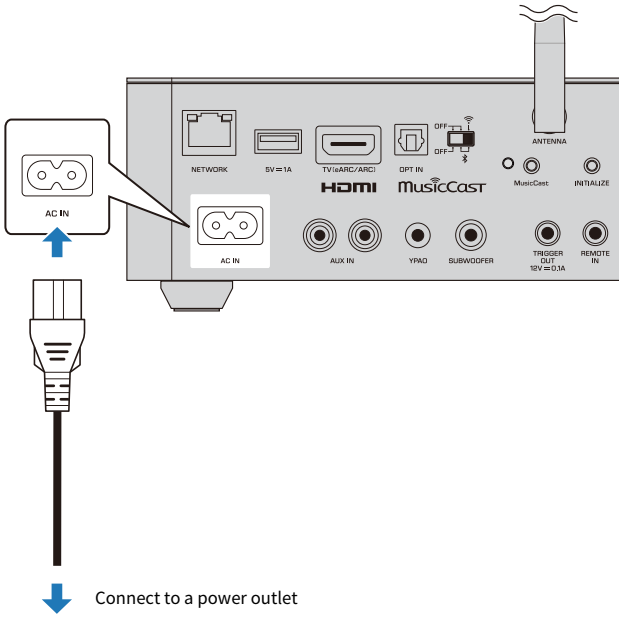

INSTALLING AND SETTING UP THE APP

Setting up MusicCast

Use the “MusicCast Controller” app to register this product to your MusicCast network.

At the same time, you can configure the wireless network connection of this product and perform automatic room calibration (YPAO). “MusicCast Controller” is a free application available for smartphones and tablets.

Required devices

- WXC-70A unit
  Ensure the power cord is already connected.
- Powered speakers or an external amplifier
  A connection that functions in [PRE AMP] mode is required. For more details, refer to the following section.
  “Connecting powered speakers or an external amplifier” (p.20)
- Smartphone or tablet
  - Must be connected to a wireless LAN router (access point).
  - Make sure that the Bluetooth function is turned on.

NOTE

Even if you are using a wired network connection, you must still complete this registration procedure for the MusicCast network. If the product is not registered to the MusicCast network, it cannot be operated using the “MusicCast Controller” app.

Setup procedure

1 Install the “MusicCast Controller” app on your smartphone or tablet.

To download the app, search for “MusicCast Controller” in the App Store or Google Play.

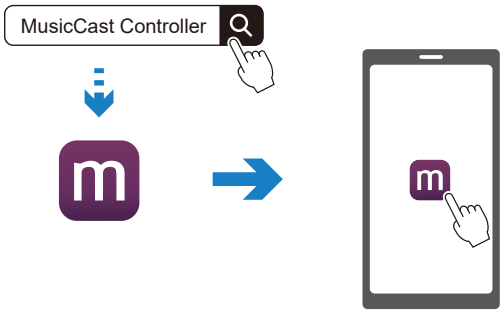

2 Launch the installed app.

3 Tap “Add New Device” to start setup.

4 Follow the on-screen instructions in the app to proceed with setup.

Operate the app and this product according to the instructions.

Operation tips

- Choose this product “WXC-70A” on the app’s device selection screen.
- If new firmware is available, a firmware update prompt will be displayed. Follow the instructions to perform the update (the update cannot be skipped).
- During setup, the following messages are shown on the information display. Continue setup by following the instructions in the app.
  - “Network Setup”: Indicates that this is the initial setup (including after initialization of this product).
  - “MusicCast Setup”: Indicates that MusicCast setup is in progress.

5 Confirm that setup is complete.

When setup is complete, a completion screen is displayed in the app.

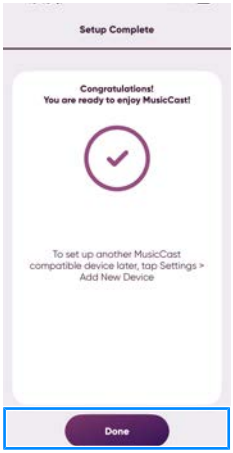

Automatic adjustment of speaker settings (YPAO)

What is YPAO?

YPAO is Yamaha's proprietary automatic room calibration function. Using the supplied microphone, this function measures the acoustic characteristics of the room and automatically adjusts settings for the speaker distance and other parameters to achieve optimal sound quality.

YPAO can be executed using the "MusicCast Controller" app.

Connections and settings required for YPAO

- To run YPAO and apply its adjustments, the following connections and settings are required.
  - Connect the powered speakers or external amplifier using an analog connection.
  - Configure the system (to [PRE AMP] mode) so that the volume is adjusted on the WXC-70A.
- For more details, refer to the following section.
  - "Connecting powered speakers or an external amplifier" (p.20)

■ When YPAO is required

Run YPAO in the following situations:

- When setting up the speakers for the first time
- After the speaker positions have been changed
- After the listening position has been changed
- When a subwoofer is added or removed

■ Accessories used

To ensure a smooth and efficient setup for YPAO, prepare the following supplied accessories in advance.

YPAO microphone

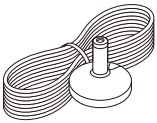

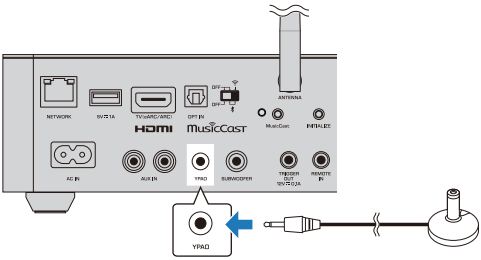

- Connect the YPAO microphone to the [YPAO] microphone jack on the rear panel.
- Connect it by following the instructions in the app. Do not connect it until instructed to do so.

■ Example of YPAO microphone placement

Refer to the diagram below for correct placement of the YPAO microphone in the room.

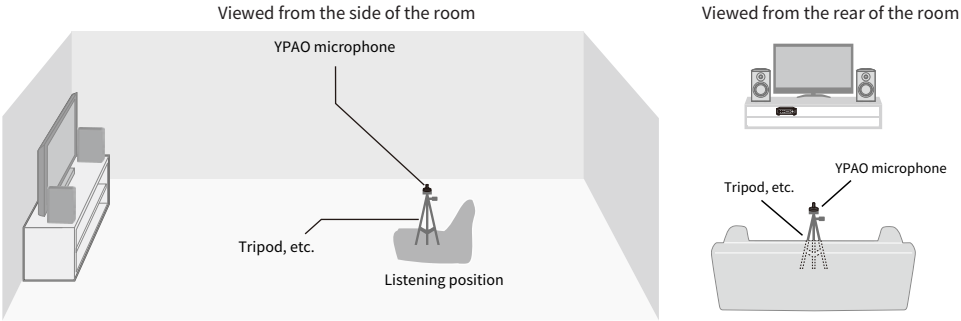

- Place the YPAO microphone at the listening position so that it is parallel to the floor.
- The YPAO microphone can also be attached to a camera tripod.

NOTICE

- After installation, be careful not to trip over the YPAO microphone cable. The microphone or cable may be damaged.

■ How do I start YPAO?

Operate using the “MusicCast Controller” app as follows:

- When installing the speakers in the room for the first time, tap “Add New Device” on the app’s startup screen and follow the on-screen instructions to complete the initial setup. YPAO is performed as part of the initial setup.
- If you change the speaker positions after initial setup or want to run YPAO again, select “Speakers & Room Calibration / Run YPAO” from the settings menu in the app.

Notes when running YPAO

- During YPAO measurement, a loud test tone will be emitted from the speakers. The volume level cannot be adjusted.
- To ensure proper adjustment, observe the following points while YPAO is running:
  - Do not make any loud noises.
  - Do not get in between the speakers and the YPAO microphone.
- Connect the YPAO microphone only when instructed to do so in the app.

■ After YPAO completion

After YPAO is completed, be sure to disconnect the YPAO microphone from the microphone jack.

Error and warning messages

When error or warning messages are displayed during YPAO measurement, resolve the cause based on the following table and perform measurement again.

■ Error type

Error No.	Error description
Code 005	Noise level is too loud. Keep the room quiet and retry YPAO. If you select “Proceed”, YPAO takes the measurement again and ignores any noise detected.
Code 008	Could not detect a measurement signal. Connect the microphone to the YPAO terminal firmly and retry YPAO.
Code 009	Measurement was canceled due to main unit operation.
Code 031	Speakers not detected. Press Quit, turn the unit off and make sure front left and right speakers are properly connected.
Code 051	Could not detect microphone. Make sure the microphone is properly connected to the YPAO terminal.
Code 061	Player mode is currently active. Please turn the unit off and switch to PRE AMP mode using the switch on the rear panel.
Code 101-199	An internal error has occurred. Exit YPAO, and turn off and on the unit.

■ Warning type

Even when a warning message is displayed, the measurement results can still be saved. However, to use the system with the optimal speaker settings, Yamaha recommends resolving the cause of the warning and running the measurement again.

Warning Messages	Warning description
Speaker may be placed more than 24 m (80 ft) from the microphone.	Adjust the speaker positions based on the YPAO measurement results.
Measurement results indicate significant differences in volume between the speakers.	Adjust the speaker positions based on the YPAO measurement results. Also, check that the subwoofer volume is set appropriately.
Speaker cable may be connected with reverse polarity (+/-).	Check the cable connection (+ and –) of the speakers. **If they are connected incorrectly:** Reconnect the speaker cables. **If they are connected properly:** Depending on the type of speakers and the installation environment, this message may be displayed even if they are connected correctly. Save the measurement results, and use the product as-is. This is a message to prompt the customer to check, but the product can be used in this state without any effect on playback.

Checking YPAO measurements and changing settings

You can check the YPAO measurements and change settings using the “MusicCast Controller” app. Operate the app from your smartphone or tablet where “MusicCast Controller” is installed.

■ Checking YPAO measurement results

1 **Start “MusicCast Controller” on your mobile device(s), select the room in which this product is installed, and then tap the settings icon.**

2 **Tap the room in which this product is installed from “Room Settings” on the Settings screen.**

3 **Tap “Speaker Setup” under “Speakers & Room Calibration” on the room screen (this product).**

4 **Check the YPAO measurement results.**

■ Setting item

In “Speaker Setup”, you can also change the settings for the items shown in the table below. For more details, refer to the app screen.

Setting item	Description
YPAO	Selects whether to apply the YPAO measurements to the speaker settings.
Subwoofer	Sets whether to use/not use subwoofer.
Front Speaker Frequency	Sets the frequency bandwidth output to the left/right speakers. If you select low frequency cut, the configured crossover frequency is applied. If a subwoofer will not be used, the setting cannot be made.
Subwoofer Frequency	Sets the speaker and subwoofer crossover frequencies. If a subwoofer will not be used, the setting cannot be made.
Distance	Sets the distance from the listening position to each speaker individually so the sound from each of them reaches you at the same time.
Level	Sets speakers individually so the volume from each sounds the same at the listening position.
EQ	Sets whether to use/not use an equalizer based on YPAO measurements.
YPAO Volume	When “YPAO Volume” is set to “On”, the balance between the bass and treble ranges is adjusted automatically in conjunction with the volume, which allows you to enjoy a natural sound quality balance, even at low volumes.

NOTE

If you will use a subwoofer, install it before running YPAO measurements to ensure a smooth connection between the bass and midrange sounds. If you feel the volume of the bass is too loud or low, adjust to the desired volume with “SW” under the “Level” item.

BASIC OPERATION

Turning the power on/off (Standby)

Turn the power on or off (standby) using the remote control or the power switch on the front panel.

■ Turning the power on/off

When using the remote control

Point the remote control at this product, and press the [⏻] key to turn on the power.

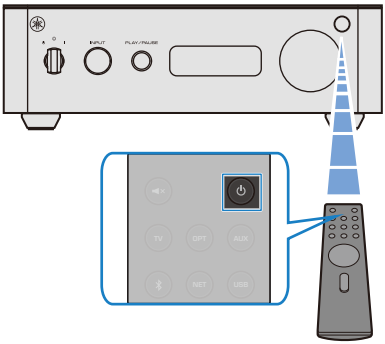

To turn off (standby), press the [⏻] key again.

When using the power switch on the front panel

To turn the power on, turn the power switch clockwise, and align it with the [|] mark. When you release your hand, the switch automatically returns to the center position.

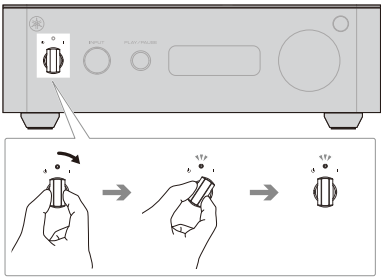

To turn the power off (standby), turn switch counter-clockwise, align it with the [⏻] mark, and then return it to the center position.

NOTE

When the power is on, the power indicator is lit white.

About the Auto Standby function

- If no operation or audio playback occurs for 20 minutes, the product will automatically switch off (standby).
- Approximately 30 seconds before turning off (standby), the information display shows a countdown indicating the remaining time.
  Example display: “Auto standby: 30 sec” (30 seconds until standby)
- To extend the time before the product turns off (standby), perform an operation such as adjusting the volume or selecting an input source, or start audio playback.
- The Auto Standby function can be disabled (set to Off) by changing the setting.
  - “Settings overview” (p.60)

Selecting an input source

This section shows how to select the input source to play.

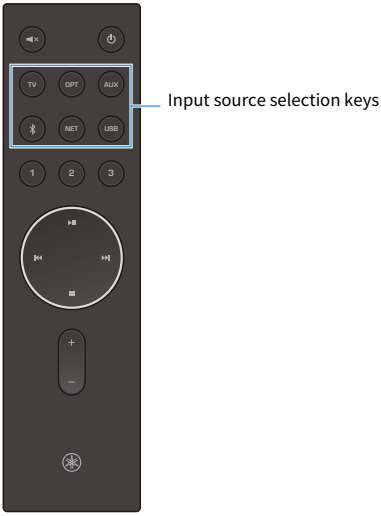

Press one of the input source selection keys on the remote control to choose the desired input source.

The input source can also be selected by turning the [INPUT] input source selector knob on the front panel to the left or right.

Input source selection keys	Playback audio
[TV]	Audio from an eARC/ARC-compatible TV input via the [TV(eARC/ARC)] jack (HDMI)
[OPT]	Audio input via the [OPT IN] jack
[AUX]	Audio input via the [AUX IN] jack
[✱]	Audio from a Bluetooth device connected to this product
[NET]	Audio from network content Various types of network content are available. Press the [NET] key repeatedly to cycle through and select the desired network content.
[USB]	Audio from music files stored on a USB flash drive

When an input source is selected, the input name appears on the information display.

Example of display when the input source is set to TV

NOTE

When the product is off (standby), pressing any input source selection key on the remote control will automatically turn the power on.

Adjusting the volume

This section explains how to adjust the playback volume and mute the sound.

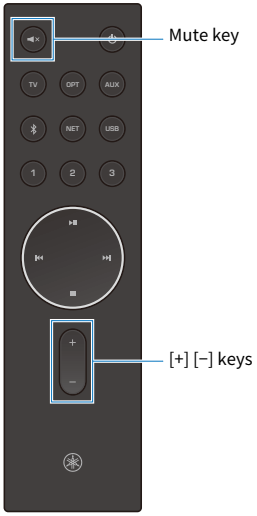

■ Adjusting the volume

Pressing the [+] key on the remote control increases the volume, and pressing the [−] key decreases the volume.

When the volume is adjusted, a numeric value between 0 and 100 appears on the information display of the front panel.

Volume (numeric display)

NOTE

- The volume can also be adjusted with the Volume knob on the front panel.
- You can also use the “MusicCast Controller” app to set the maximum volume limit and the initial volume level when the power is turned on.
- If a maximum volume limit is set, the volume cannot be set higher than that setting value. After the limit is reached, if you try to increase the volume further, “MAX” is displayed.

■ Muting the sound

Pressing the [◄×] mute key on the remote control mutes the sound. Pressing it again returns the volume to its original level.

When muted, the information display shows “MUTE”.

Minimum volume (MUTE)

PLAYBACK

Listening to TV audio on this product

You can play audio from a TV connected to the [TV(eARC/ARC)] jack (HDMI) on this product.
Follow the steps below.

1 **Turn on the TV.**

2 **Press the [TV] key on the remote control.**

The input source switches to TV ([TV]).

At the same time, the TV's audio output is switched so that the TV sound is played through this product.

TV audio settings

The [TV(eARC/ARC)] jack on this product supports playback in PCM 2-channel audio only.
Change the TV's eARC/ARC audio output setting to PCM 2-channel. If not set correctly, the audio may not play at all or may play as loud noise. For more details, refer to the user's manual for the TV.

Related links

- "Connecting a TV" (p.26)
- "Problems with TV connections (HDMI)" (p.73)

Playing audio from an external audio device

You can play audio from devices (such as CD players, portable music players, and TVs) connected to the [OPT IN] jack or [AUX IN] jack.

Follow the steps below.

1 **Turn on the connected audio device.**

2 **Press the [OPT] or [AUX] key on the remote control to select the desired input source.**

The input switches to the selected input source.

3 **Start playback on the connected audio device.**

NOTE

When the product is off (standby), pressing an input source selection key on the remote control automatically turns the power on.

Related links

- “Connecting an audio device” (p.28)
- “Problems with the audio” (p.71)

Playing audio from a Bluetooth® device

You can play audio from a Bluetooth device connected to this product.

This product supports multipoint connection, allowing simultaneous connection with two paired Bluetooth devices.

CAUTION

- Adjust the volume carefully when playing audio via Bluetooth. Adjusting the volume on the Bluetooth device may cause an unexpected increase in sound level, which could result in hearing impairment or damage to the equipment.
- If the volume suddenly becomes too loud during playback, stop playback immediately.

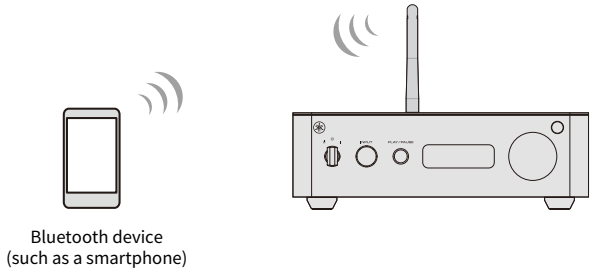

■ When connecting a Bluetooth device for the first time (first device)

1 Press the [⁑] key on the remote control.

The input source switches to Bluetooth and pairing mode is activated.

Pairing mode is canceled after 2 minutes.

2 Select this product (network name of this product) on the Bluetooth device.

When prompted for a passkey, enter the number “0000”.

When the Bluetooth connection is established, “Connected” appears on the information display.

3 Start audio playback on the Bluetooth device.

■ When connecting a second or subsequent Bluetooth device

1 Press the [⦚] key on the remote control.

The input source switches to Bluetooth.

2 Press and hold the [⦚] key on the remote control (for more than 5 seconds).

Pairing mode is activated.

Pairing mode is canceled after 2 minutes.

3 Select this product (network name of this product) on the Bluetooth device.

When prompted for a passkey, enter the number “0000”.

When the Bluetooth connection is established, “Connected” appears on the information display.

4 Start audio playback on the Bluetooth device.

NOTE

- During playback, the volume on this product can be controlled from the Bluetooth device (some Bluetooth devices may be unable to control the volume).
- You can control playback on the Bluetooth device using the [■] (Stop) key and [▶II] (Play/Pause) key on the remote control. Playback can also be controlled with the [PLAY/PAUSE] playback control button on the front panel.
- To disconnect the Bluetooth device, perform one of the following operations.
  - Disconnect the connection from the Bluetooth device.
  - Switch this product’s input source to something other than “Bluetooth”.

About multipoint connection

- Up to two Bluetooth devices can be connected simultaneously using multipoint connection. To connect another Bluetooth device, disconnect one of the two currently connected devices.
- Music playback can be started from either connected device. However, the device that starts playback later takes priority. Simultaneous playback from two devices is not possible.
- Multipoint connection behavior may vary depending on the Bluetooth device. Depending on the app or software used on the Bluetooth device, operation may not function correctly. Operation is not guaranteed with all Bluetooth-compatible devices.

Related links

- “Problems with Bluetooth” (p.74)
- “Supported Bluetooth devices” (p.81)

Playing music files from a USB flash drive

You can play music files stored on a USB flash drive.

Follow the steps below.

1 Connect the USB flash drive to the USB jack on the rear panel of this product.

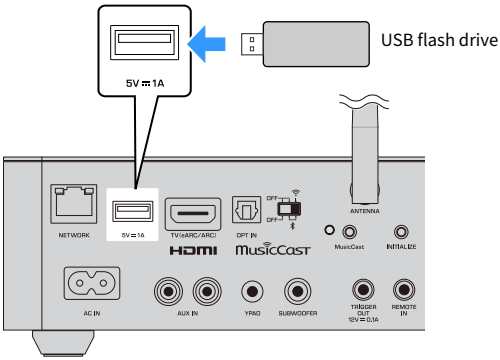

2 Press the [USB] key on the remote control.

If the last played track is stored in memory, playback starts automatically.

If playback does not start automatically, press the [▶II] key on the remote control. Playback can also be controlled with the [PLAY/PAUSE] playback control button on the front panel.

3 To select a track, press the [I◀◀] or [▶▶I] key on the remote control.

Press and hold each key for more than 2 seconds to fast-reverse or fast-forward.

To stop playback, press the [■] key on the remote control.

Using the “MusicCast Controller” app, you can perform more detailed playback operations, such as displaying a list of songs on the USB flash drive and repeat/shuffle playback.

NOTE

- When a USB flash drive is connected to this product for the first time, the first song in the top-level folder (root folder) of the USB flash drive is played automatically.
- When there are a lot of files, it may take time to load them.
- Up to 500 songs can be played. Depending on the folder structure, the maximum number of songs may be lower.
- To prevent file corruption, stop playback before removing the USB flash drive.
- Connect the USB flash drive directly to the USB jack.
- Do not connect any devices other than a USB flash drive to the USB jack. Also, do not use it for charging purposes.
- Power is not supplied to the USB jack while the product is in standby.
- Depending on the USB flash drive used, it may not operate properly.

Related links

- “Problems with USB” (p.75)
- “Supported USB devices” (p.82)

Listening to music via AirPlay

You can play music and other audio content on this product using AirPlay. Tap (or click) the AirPlay icon on your iPhone or iTunes/Music, and then select this product (its network name) as the audio output destination.

CAUTION

- During playback, you can control the volume of this product from your AirPlay device.
- Adjust the volume carefully when playing audio using AirPlay. Adjusting the volume on an AirPlay device may cause an unexpected increase in sound level, which could result in hearing impairment or damage to the equipment.
- If the volume suddenly becomes too loud during playback, stop playback immediately.

NOTE

- The network name of this product displayed on your AirPlay device corresponds to the room name set using the “MusicCast Controller” app.
- For details on AirPlay, refer to Apple’s official website.

Listening to music via Google Cast™

The WXC-70A works with Google Cast so you can stream your favorite music and audio from hundreds of apps to this product by simply tapping the Google Cast icon.

About Google Cast setup

- When using this function for the first time, Google Cast setup is required.
- If you skipped Google Cast setup using the “MusicCast Controller” app during initial setup of this product, go to “External Service / Google Cast” in the app’s settings menu and complete the setup.

Here, an example of playing music using a Google Cast-compatible app installed on a smartphone or tablet is explained.

1 Launch a Google Cast-compatible app.

2 Tap the Google Cast icon.

3 Select this product (network name) from the device list.

CAUTION

- During playback, you can control the volume of this product from the smartphone or tablet.
- Adjusting the volume from the smartphone or tablet may unintentionally increase the volume, which could result in hearing impairment or damage to the equipment.
- If the volume suddenly becomes too loud during playback, stop playback immediately.

NOTE

- The network name of this product displayed in the device list corresponds to the room name set using the “MusicCast Controller” app.
- For details about Google Cast, visit the following website.
  https://www.android.com/better-together/#cast
- Google Cast is a trademark of Google LLC.

Playing songs on a media server (PC/NAS)

You can play music files stored on a media server (such as a PC or NAS) that is connected to the same network as this product.

Use the “MusicCast Controller” app to browse the list of tracks on the media server, and select your preferred music file for playback. Using the app, you can perform various playback operations such as repeat and shuffle playback.

NOTE

Before using this function, you must enable the media sharing setting on your media server device or media server software. For more details, refer to the user's manual of the respective device or software.

Basic operations can also be performed using the remote control. Follow the steps below.

1 Press the [NET] key on the remote control repeatedly to select “Server” as the input source.

If the last played track is stored in memory, playback starts automatically.

If playback does not start automatically, press the [▶II] key on the remote control. Playback can also be controlled with the [PLAY/PAUSE] playback control button on the front panel.

2 To select a track, press the [⏮] or [⏭] key on the remote control.

Press and hold each key for more than 2 seconds to fast-reverse or fast-forward.

To stop playback, press the [■] key on the remote control.

Using the “MusicCast Controller” app, you can perform more detailed playback operations such as repeat and shuffle playback.

NOTE

- You can also register your favorite content as presets for easy access.
  - “Preset function” (p.58)
- If the audio drops out when connected to a wireless network, connect to a wired network.
  - “Connecting to a network” (p.30)

Listening to Internet radio

You can enjoy playback of audio from Internet radio stations on this product.

Use the “MusicCast Controller” app to browse the list of available Internet radio stations, and select your preferred station for playback.

Basic operations can also be performed using the remote control. Follow the steps below.

1 Press the [NET] key on the remote control repeatedly to select “Net Radio” as the input source.

If the last played station is stored in memory, playback starts automatically.

To stop playback, press the [■] key on the remote control.

NOTE

- You can also register your favorite Internet radio stations as presets for easy access.
  - “Preset function” (p.58)
- Depending on network conditions or the time of day, some Internet radio stations may be temporarily unavailable.
- This function uses the airable.Radio service. The airable service is provided by the company airable GmbH. This service is subject to change, suspension, or termination without notice. Yamaha Corporation shall not be held responsible for any resulting inconvenience or damages.

Listening to podcasts

You can play audio from podcasts.

Use the “MusicCast Controller” app to display a list of podcasts and select your desired content. Using the app, you can perform various playback operations such as repeat and shuffle playback (episode-based content only).

Basic operations can also be performed using the remote control. Follow the steps below.

1 Press the [NET] key on the remote control repeatedly to select “Podcasts” as the input source.

If the last played content is stored in memory, playback starts automatically.

If playback does not start automatically, press the [▶II] key on the remote control. Playback can also be controlled with the [PLAY/PAUSE] playback control button on the front panel.

2 To select specific content, press the [I◀◀] or [▶▶I] key on the remote control.

To stop playback, press the [■] key on the remote control.

NOTE

- You can also register your favorite podcast content as presets for easy access.
  - “Preset function” (p.58)
- This function uses the airable.Radio service. The airable service is provided by the company airable GmbH. This service is subject to change, suspension, or termination without notice. Yamaha Corporation shall not be held responsible for any resulting inconvenience or damages.

Listening to streaming services

You can play content distributed by various streaming services. Playback uses the dedicated apps provided by each streaming service.

NOTE

For information on the available streaming services, refer to “Specifications” (p.86) under “Network functions”.

To play content, select this product as the playback device from the dedicated app for each service. For details, refer to the website of the respective streaming service.

About streaming services

- The supported streaming services vary depending on the region where the product was purchased and the region in which it is used. Even if the product supports a given streaming service, it cannot be used outside the service provider’s coverage area. Conversely, even within a service provider’s coverage area, the service cannot be used if the product does not support it.
- Some streaming services may require a paid subscription and/or a dedicated app. For details on each streaming service, refer to the respective service provider’s website.
- Services provided by the streaming services are subject to change, suspension, or discontinuation without notice. Yamaha Corporation shall not be held responsible for any resulting inconvenience or damages.

Listening to audio from other MusicCast devices

You can share audio among multiple MusicCast devices. For example, you can play audio from a MusicCast device in another room simultaneously on this product.

You can also play audio from a source device connected to this product on a MusicCast device in another room. These operations are performed using the “MusicCast Controller” app.

NOTE

When audio from another MusicCast device is being played on this product, “MusicCast Link” is shown on the information display.

USEFUL FUNCTIONS

Preset function

Your favorite content, such as songs currently being played or Internet radio stations, can be registered as presets, allowing you to easily recall them later.

Presets can be registered and recalled using the “MusicCast Controller” app. Preset numbers 1, 2, and 3 can also be registered and recalled using the remote control of this product.

NOTE

- You can register up to 40 presets in total.
- The following input sources can be registered as presets:
  - USB
  - Server
  - Net Radio
  - Certain streaming services
- The “Bluetooth” input can be registered only as an input source. The song currently playing cannot be registered.
- The content that can be registered for “Net Radio” and streaming services varies depending on the selected radio station or the service.

■ Registering and recalling presets using the remote control [1] [2] [3] keys

Registering a preset

1 **Start playback of the song, Internet radio station, or other content you want to register.**

2 **Press and hold one of the desired number keys ([1], [2], or [3]) on the remote control for at least 3 seconds.**

If another item is already registered to that number key, it will be overwritten.

When registration is complete, the preset number appears on the information display.

Example of display when registered to preset number 1

This completes the registration.

Recalling a preset

1 **Press the desired preset number key ([1], [2], or [3]) on the remote control.**

The selected preset number and input source name appear on the information display.

Example of display when “Net Radio” is registered to preset number 1

The registered content begins playback.

NOTE

If nothing is registered to the recalled number, the following appears:

- Example of display when nothing is registered to preset number 3

Related links

- “Playing music files from a USB flash drive” (p.49)
- “Playing songs on a media server (PC/NAS)” (p.53)
- “Listening to Internet radio” (p.54)

SETTINGS

Settings overview

Various settings for this product can be configured using the dedicated “MusicCast Controller” app. This guide lists an excerpt of the setting items. For more details, refer to the app.

(Room name)/Settings

Type	Setting item	Description
LINK	Link control	Sets whether speed or stability is prioritized during MusicCast Link.
	Audio Delay	Adjusts the audio synchronization during MusicCast Link.
	Audio Quality	Sets the audio quality (compressed or uncompressed) during MusicCast Link.
Firmware	Update Settings	You can configure settings related to firmware updates for this product.
External Service	Google Cast	Performs Google Cast setup. Setup is required to use Google Cast.
	Streaming Service Account	Configures settings related to various streaming services.
Speakers & Room Calibration	Run YPAO	Automatically adjusts speaker settings using YPAO. “Automatic adjustment of speaker settings (YPAO)” (p.35)
	YPAO Results	Used to check the characteristics and parameters when using the YPAO equalizer.
	Speaker Setup	Configures settings such as enabling/disabling speaker settings optimized by YPAO, enabling/disabling subwoofer use, speaker distance and volume, and enabling/disabling the equalizer and YPAO volume.
Sound	Sound Settings	Configures YPAO Volume and other settings. Please refer to the Sound Settings table.
	Volume Settings	• Maximum Volume: Sets an upper limit for the output volume. • Initial Volume: Sets the volume level for when the product is turned on. • Input Level: Adjusts volume differences between input sources.
Video/HDMI	HDMI Control	Sets whether to link the product’s operations with an HDMI control–compatible TV. • Auto: When entering standby, it automatically determines whether HDMI control remains enabled based on the current HDMI connection status between this product and the TV. • Off: Disables HDMI control. • On: Enables HDMI control. Default: Auto When set to “On”, standby power usage will be slightly higher than when set to “Off”. If operation linked with the TV does not function when set to “Auto”, set this to “On”.

Type	Setting item	Description
Display	Dimmer	Adjusts the brightness of the information display. Available settings: • 0 • 1 • 2 • 3 The higher the value, the brighter the display. Default: 3
	Time until lights turn off	Sets the time until the information display turns off automatically. Available settings: • Always on • 10 sec • 15 min • 30 min Default: 30 min
Utility	Auto Power Standby	Sets whether the product automatically switches to off (standby) when no content has been played for 20 minutes. • Off: Does not automatically switch to off (standby). • On: Automatically switches to off (standby). Default: On When set to “On”, power usage will be slightly higher than when set to “Off”.
	Bluetooth Standby	Sets whether Bluetooth connection is available while the product is off (standby). • Off: Bluetooth connection is disabled while in standby. • On: Bluetooth connection is enabled while in standby. If set to “On”, when a Bluetooth device initiates a connection, the product automatically turns on and switches to the Bluetooth input source. Default: On
	Auto play	Sets whether playback of the previous content is automatically started when the power is turned on or when the input source is switched. • Off: Playback does not start automatically. • On: Playback starts automatically. Default: On Auto playback is available for the following input sources: Server, Net Radio, Podcasts, and USB. Auto playback may not work with certain input sources and content.
External Features	Advanced Settings	Opens the advanced settings in a web browser. “Other network functions” (p.90)

Sound Settings

Type	Setting item	Description
Sound	YPAO Volume	Enables or disables YPAO Volume. When YPAO Volume is enabled, the balance between the bass and treble ranges is adjusted automatically according to the listening volume, enabling you to enjoy a natural sound quality balance even at low volumes.
	Dialogue Level	Adjusts the volume of centrally positioned sounds, such as dialogue.
	Tone Control Treble	Adjusts the output level of high-frequency sounds.
	Tone Control Bass	Adjusts the output level of low-frequency sounds.
	Subwoofer Level	Adjusts the output level of the connected subwoofer.
	Balance	Adjusts the volume balance between the left and right speakers.
Speakers & Room Calibration	Run YPAO	Automatically adjusts speaker settings using YPAO. “Automatic adjustment of speaker settings (YPAO)” (p.35)
	YPAO Results	Used to check the characteristics and parameters when using the YPAO equalizer.
	Speaker Setup	Configures settings such as enabling/disabling speaker settings optimized by YPAO, enabling/disabling subwoofer use, speaker distance and volume, and enabling/disabling the equalizer and YPAO volume.
Timer	Sleep (minute)	Sets the duration of the sleep timer. Available settings: • Off • 30 min • 60 min • 90 min • 120 min When the specified time has elapsed, the product automatically turns off (standby).
Information	Audio information	Displays audio information for the currently playing track on the playback screen.
	Volume Display	When enabled, the volume is displayed as a percentage.

NOTE

Depending on the playback conditions, this setting may be unavailable or may have no effect.

Initializing and resetting the product

This section explains how to initialize or reset the product.

■ Initializing

Initialization refers to the process of returning this product to its factory default settings. To initialize the product, perform the following steps.

1 Turn off (set to standby) the power of the product.

2 Press and hold the [INITIALIZE] button on the rear panel for about 5 seconds.

The [MusicCast] indicator blinks twice.

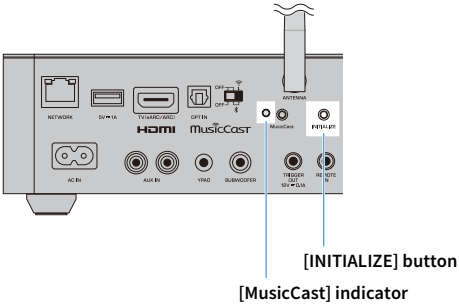

3 Turn on the power.

This completes the initialization process.

■ Performing a force-reset

Forcing the product to restart is referred to as a force-reset. If the product becomes unresponsive for any reason, performing a force-reset may resolve the issue.

To perform a force-reset, use the following procedure.

1 Turn the power switch on the front panel counterclockwise to align it with the [⏻] mark and leave it there, and wait for about 10 seconds.

2 Return the power switch to the center position.

3 Turn on the power.

Turn the power switch clockwise to align it with the [|] mark, and then return it to the center position, or press the [⏻] key on the remote control.

This completes the force-reset procedure.

NOTE

The force-reset is also performed if you unplug the power plug from the AC outlet and then plug it back in.

FIRMWARE UPDATE

Updating the firmware using the app

Updated firmware is provided to add functionality to this product or fix performance issues. For details about firmware updates, please visit the Yamaha website.

If this product is connected to the MusicCast network, a message will appear in the “MusicCast Controller” app when a new firmware update is ready. Follow the on-screen instructions to update the firmware.

NOTICE

- Do not operate the product or unplug its power cord or network cable during the firmware updating process. If the process is interrupted, this product may become unusable. In that case, the product will require servicing.

NOTE

Depending on the network connection status, the firmware update may fail. In such cases, wait for a while and try again, or perform the update using a USB flash drive.

Related links

“Updating the firmware using a USB flash drive” (p.66)

Updating the firmware using a USB flash drive

If this product is not connected to the Internet, or if the Internet connection is too slow, update the firmware using a USB flash drive instead. To perform the update, operate the unit while viewing the information display on the front panel.

Use a USB flash drive that meets the following requirements:

- Supports Mass Storage Class
- Formatted in FAT16 or FAT32
- Encryption function is disabled
- Contains no data (empty)

NOTICE

- Do not operate the product or unplug its power cord or network cable during the firmware updating process. If the process is interrupted, this product may become unusable. In that case, the product will require servicing.

1 Download the firmware.

For more information, visit the information page for this product on the Yamaha website.

2 Extract (unzip) the downloaded compressed file.

3 Save the firmware file “000xxx-xxxx.bin” to the USB flash drive.

Save the file in the top (root) folder of the USB flash drive. When saving, do not rename the file.

4 Unplug the power plug from the AC outlet.

5 Insert the USB flash drive into the USB jack on the rear panel of this product.

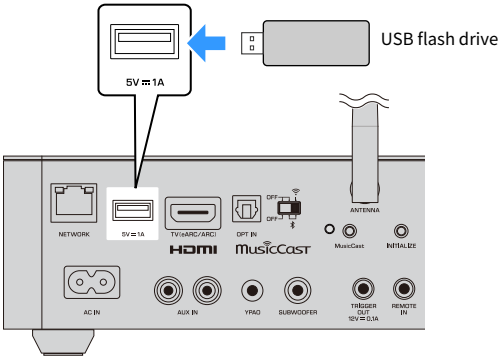

6 While holding down the [MusicCast] button on the rear panel, plug the power plug into the AC outlet.

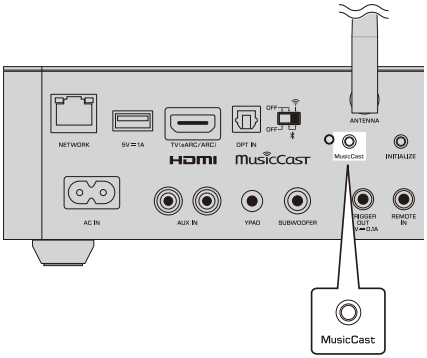

[MusicCast] button

7 Press the [PLAY/PAUSE] button.

The firmware update starts, and “Updating..” appears on the information display. Even if you do not press the [PLAY/PAUSE] button, the update will begin automatically after a short time.

Never turn off the power while updating the firmware.

When the firmware update is complete, “Update Success” appears on the information display and this product automatically restarts.

While the product is restarting, “Warming Up..” is displayed. When the restart is complete, this message disappears from the display, and the power is turned on.

This completes the update. Remove the USB flash drive from the USB jack.

If “Update Failed” appears on the information display, perform the procedure again starting from step 1.

TROUBLESHOOTING

Before assuming a malfunction

If you suspect a malfunction, check the following points first

- The power cords of this product, the connected audio devices (CD player, etc.), and the TV are securely connected to AC outlets.
- The power of this product, subwoofer, connected audio devices (CD player, etc.) and TV is turned on.
- All connection cables between devices are securely plugged into the jacks.

Problems with power, system, and/or remote control

Power fails to turn on

● **The protective circuit has been activated 3 times in a row.**

If the Power Indicator on the front panel of the product flashes when you try to turn the power on, the protective circuit has been activated, and so the power cannot be turned on. Please contact an authorized service center to have it repaired.

The power turns off suddenly

● **The protective circuit has activated (when the power indicator on the front panel flashes).**

After confirming that the power cord is properly connected, turn the power on again.

If the product repeatedly switches off, unplug the power cord from the AC outlet and contact an authorized service center.

● **The sleep timer activated.**

Turn the power back on and start playback. For more details, refer to the following.

・“Settings overview” (p.60)

● **The Auto Standby function was activated because the set period of time elapsed without operating the product.**

To disable the Auto Standby function, set “Auto Power Standby” to “Off”. For more details, refer to the following section.

・“Settings overview” (p.60)

● **The volume was increased too high, activating the protective circuit.**

Lower the volume.

The product does not respond to controls

● **The internal microcomputer is frozen due to an external electric shock (such as lightning or excessive static electricity) or to a drop in the power supply voltage.**

Unplug the power cord from the AC outlet, wait for at least 15 seconds, and then plug it in again. Then turn on the power.

If the issue persists, try performing a “force-reset”.

・“Initializing and resetting the product” (p.63)

This product cannot be operated with the remote control

● **It is outside the operating range.**

Try using it within the operating range. For more details, refer to the following.

・“Preparing the remote control” (p.10)

● **The batteries are dead.**

Replace with new batteries.

● **Strong light or sunlight is hitting the remote control signal receiver on the main unit.**

Change the lighting or the orientation of the product.

The information display is off

- **The power is off.**

  Check the connection of the power cord, and then turn on the power.

- **Because no operation was performed for a certain period of time, the information display has dimmed or turned off.**

  Perform an operation.

  ・“Information display” (p.16)

Problems with the audio

No sound

● **There is a problem with the HDMI connection (for example, no sound from the TV connected via HDMI).**

For more details, refer to the following section.

・“Problems with TV connections (HDMI)” (p.73)

● **A different input source is selected.**

Use the input source selection key on the remote control to select the correct input source. For more details, refer to the following section.

・“Selecting an input source” (p.41)

● **The product is receiving an input signal that it cannot play.**

This product cannot play some digital audio formats. Check whether the signal is playable.

See the following for the supported file formats, HDMI audio formats, and supported codec formats.

・“Playable file formats (Network/USB)” (p.83)
・“Listening to TV audio on this product” (p.45)
・“Specifications” (p.86)

● **A cable connecting this product and an audio device is damaged.**

If you check the connections and they seem fine, replace the cable with a different one.

● **The audio is muted.**

Press the [🔇] mute key on the remote control to cancel muting.

● **The powered speakers or external amplifier are not turned on, or are not connected properly.**

Turn on the powered speakers or external amplifier. Also, check that it is connected properly.

・“Connecting powered speakers or an external amplifier” (p.20)

No sound is output from the subwoofer

● **The subwoofer is not powered on, or is not connected properly.**

Turn on the power of the subwoofer. Also, check that it is connected properly.

・“Connecting a subwoofer” (p.25)

● **The volume of the subwoofer is extremely low.**

Adjust the volume on the subwoofer itself.

● **The auto-standby function of the subwoofer (for automatically turning the power off (standby)) was activated.**

Disable auto-standby or adjust its operating sensitivity on the subwoofer itself.

Sound is distorted

● **The volume is too loud.**

Lower the volume.

Audio drops out (when using a wireless network)

● **Electromagnetic waves from a microwave oven or other wireless devices are interfering with wireless communication.**

Turn those devices off, or move them away from this product and the wireless LAN router. Also, if your wireless LAN router supports the 5 GHz frequency band, switch the connection to the 5 GHz band.

Volume cannot be increased

● **The maximum volume is set too low.**

Use “Volume Settings” in the “MusicCast Controller” app to adjust the maximum volume level. For more details, refer to the following section.

・“Settings overview” (p.60)

The volume is too low (or too high) for a certain input source

● **There is a difference in volume level between input sources.**

Use “Input Level” in the “MusicCast Controller” app to adjust the volume for each input source individually.

Problems with TV connections (HDMI)

For this item, settings on the TV side may be required. For more details, refer to the user's manual for the TV.

TV audio is not output from this product

- **The HDMI cable is not connected to an eARC or ARC-compatible HDMI jack of a TV.**
  If the TV has multiple HDMI input jacks, make sure it is connected to one labeled “eARC/ARC” or “ARC”.
- **The TV’s eARC function is disabled (for eARC-compatible TVs).**
  Enable the eARC function in the TV’s settings.
- **The TV’s HDMI Control function is disabled (for TVs that support ARC only).**
  Enable the HDMI Control function on the TV.
- **The TV is configured to output audio from its own speakers.**
  Change the TV’s audio output setting so that TV sound is output not from the TV speakers but from the external device (this product).
- **The audio format output from the TV is not set correctly.**
  The audio that can be played on this product via the [TV(eARC/ARC)] jack is PCM 2-channel only. Check the settings on your TV, and set the audio format for eARC/ARC output to the PCM 2-channel format.
- **The TV connected via HDMI cable is not eARC or ARC-compatible.**
  Connect this product to a TV that supports eARC or ARC using an HDMI cable. For more details, refer to the following.
  ・“Connecting a TV” (p.26)

Even when you select this product as the input source on the TV, no picture is displayed

- **This product does not output video (such as content or settings screens) or audio to the TV.**

The product does not power on together with the TV

- **The HDMI Control setting of this product is set to “Off”.**
  Set HDMI Control to “Auto” or “On”. For more details, refer to the following section.
  ・“Settings overview” (p.60)
- **The function settings for the TV’s HDMI Control are incorrect.**
  If the product does not turn on together with the TV, the TV’s audio output at startup may be set to “TV Speakers”. If the product does not turn off together with the TV, the TV’s standby-link (power-sync) setting may be “Off”. Refer to the user's manual of the TV and configure the HDMI Control function.
- **Power synchronization stopped working after a power outage.**
  1. Unplug the power cords of this product and the TV, and wait for about 5 minutes.
  2. Next, connect the power cord to the TV and wait for another 5 minutes.
  3. Finally, connect the power cord to this product.

Problems with Bluetooth

Cannot connect with a Bluetooth device

● **This product's wireless functions are stopped.**

Check the wireless switch on the rear panel of the product. Set the switch so that the wireless functions are enabled.

・"How to disable wireless functions" (p.92)

● **The Bluetooth function of the Bluetooth device is off.**

Turn on the Bluetooth function of the Bluetooth device.

● **This product is connected to a different Bluetooth device.**

Disconnect the currently-connected Bluetooth device, and connect to the desired Bluetooth device. For more details, refer to the following section.

・"Playing audio from a Bluetooth® device" (p.47)

● **This product and the Bluetooth device are too far apart.**

Move the Bluetooth device closer to this product.

● **Interference from devices (microwave oven, wireless network, etc.) using the same 2.4 GHz frequency band as Bluetooth is impeding wireless communications.**

Move this product and/or the Bluetooth device away from those devices. Also, if your wireless LAN router supports the 5 GHz frequency band, switch the connection to the 5 GHz band.

● **The Bluetooth device you are using does not support the A2DP and/or AVRCP profiles.**

Use a Bluetooth device that supports the A2DP and/or AVRCP profiles.

● **The connection information registered to the Bluetooth device is not functioning properly for some reason.**

Delete the connection information of the Bluetooth device and then reconnect this product to the Bluetooth device.

When connected via Bluetooth®, there is no sound, or the sound is intermittently disrupted

● **The volume of the Bluetooth device is too low.**

Turn up the volume of the Bluetooth device.

● **The audio output destination of the Bluetooth device is not set to this product.**

Set the audio output destination of the Bluetooth device to this product.

● **The Bluetooth connection was cut off.**

Establish the Bluetooth connection again. For more details, refer to the following section.

・"Playing audio from a Bluetooth® device" (p.47)

● **This product and the Bluetooth device are too far apart.**

Move the Bluetooth device closer to this product.

Problems with USB

The USB device is not recognized

- **The USB device is not plugged into the USB jack correctly.**
  Turn off this product and then plug in the USB device again.
- **The USB device being used is in a format other than FAT16/32 or exFAT.**
  Use a FAT16/32 or exFAT formatted USB device.

The folders and/or files on the USB device are not displayed

- **The data on the USB device is protected by an encryption function.**
  Use a USB device that is not encrypted.

The content on the USB device fails to play when its preset number is selected

- **A USB device other than the one at the time of registration is plugged in.**
  Connect the USB device registered to the preset number.
- **The registered content (files) was moved to a different folder.**
  Register the content again.
- **Other music files were added to or deleted from the folder.**
  If the folder or file structure has been changed, registered content may not be recalled correctly. Register the content again.

Files on the USB device fail to play consecutively

- **The selected folder contains files that cannot be played on this product.**
  Do not put files that cannot be played on this product into the folder to be played.
- **The selected folder contains more than 500 songs.**
  Up to 500 songs can be played. Depending on the folder structure, the maximum number of tracks may be reduced.

Problems with network

Network functions cannot be used

● **This product's wireless functions are stopped.**

Check the wireless switch on the rear panel of the product. Set the switch so that the wireless functions are enabled.

・"How to disable wireless functions" (p.92)

● **Network information (IP address) was not acquired properly.**

Enable the DHCP server function of the router.

Cannot connect to the Internet via a wireless LAN router (access point)

● **The power of the wireless LAN router is off.**

Turn the wireless LAN router on.

● **This product is too far from the wireless LAN router.**

Move the wireless LAN router and/or this product closer to each other.

● **There is an obstacle between this product and the wireless LAN router.**

Remove the obstacle between this product and the wireless LAN router.

● **The wireless network router is configured to use channel 14.**

Change the wireless network router settings so it uses one of the channels between 1 and 13.

● **The MAC address filter of the wireless network router is enabled.**

Set the MAC address filter of the wireless network router to disabled.

Cannot find the wireless network

● **Electromagnetic waves from a microwave oven or other wireless devices are interfering with wireless communication.**

Turn those devices off, or move them away from this product and the wireless LAN router. Also, if your wireless LAN router supports the 5 GHz frequency band, switch the connection to the 5 GHz band.

● **Access to the network is restricted by the firewall settings of the wireless LAN router.**

Check the firewall settings of your wireless LAN router.

Wireless connection is frequently disconnected or unstable

● **Electromagnetic waves from a microwave oven or other wireless devices are interfering with wireless communication.**

Turn those devices off, or move them away from this product and the wireless LAN router. Also, if your wireless LAN router supports the 5 GHz frequency band, switch the connection to the 5 GHz band.

● **This product is too far from the wireless LAN router.**

Move the wireless LAN router and/or this product closer to each other.

● **There is an obstacle between this product and the wireless LAN router.**

Remove the obstacle between this product and the wireless LAN router.

Cannot detect a media server (PC/NAS)

- **The share settings of the media server are not correct.**
  Change the share settings of the media server so this product can access the folders on the media server.
- **Access to the media server is restricted by security software settings, etc.**
  Check the security software settings of the media server and/or router.
- **This product is not connected to the same network as the media server.**
  Check the network connections and/or the router settings, and connect this product to the media server over the same network (same router).

Media server (PC/NAS) files will not display (or play)

- **This product or the media server are using an unsupported file format.**
  Use file formats that are supported by both this product and the media server. Refer to the following for the music file formats supported by this product.
  ・“Playable file formats (Network/USB)” (p.83)

Media server (PC/NAS) content cannot be played when its preset number is selected

- **The power is off.**
  Make sure the power of the media server (PC/NAS) is on.
- **Not connected to the network.**
  Check the network connections and/or the router settings.
- **The registered content (files) was moved to a different folder.**
  Register the content again.
- **Other music files were added to or deleted from the folder.**
  In this case, it may not be possible to recall registered content. Register the content again.

Cannot play Internet radio

- **Not connected to the Internet.**
  In order to use Internet radio, this product must be connected to the Internet. Check the network connection.
  ・“Connecting to a network” (p.30)
- **The selected Internet radio station service is currently out of service.**
  It may not be possible to receive the radio station due to a network error on the radio station side, or the service may currently be stopped. Wait a while and try again, or select a different station.
- **The selected Internet radio station is broadcasting silence.**
  Some radio stations broadcast silence at certain times. In such a case, no sound plays even if the station is being received. Wait a while and try again, or select a different station.
- **A temporary network error has occurred.**
  Playback may not be possible due to a communication error. Wait a while and select the radio station again.
- **Access to the network is restricted by the firewall settings of the router or network devices.**
  Check the firewall settings. Note that Internet radio can only be played via the port specified by each radio station. The port number varies depending on the radio station.

When using AirPlay, this product is not detected by the iPhone

- **You are using a router that supports multi SSID.**

  The network isolating function of your wireless LAN router (access point) may be preventing access to this product. When connecting your iPhone, use an SSID that allows access to this product (try connecting to the primary SSID).

Music doesn’t play via AirPlay

- **You are trying to listen to music that cannot be played on your iPhone.**

  Make sure the files are playable. If you cannot play it even on your iPhone itself, the music data and/or storage area may be damaged.

This product is not detected by the dedicated app on the mobile device

- **This product is not connected to the same network as the mobile device.**

  Check the network settings and/or the router settings and connect to the same network.

- **You are using a router that supports multi SSID.**

  The network isolating function of your wireless LAN router (access point) may be preventing access to this product. When connecting your mobile device, use an SSID that allows access to this product (try connecting to the primary SSID).

Unable to update the firmware via the network

- **Your network connection is poor.**

  Wait a while and try again.

Error display

If an error occurs in this product, the following indications are displayed on the information display or indicator. Follow the appropriate corrective action according to the type of error.

■ Error indications on the information display

Display	Error description and corrective action
Version Error	The firmware update may have failed. Perform the update again. Depending on the network connection status, the update may fail. In such cases, wait for a while and try again, or perform the update using a USB flash drive. For updates using a USB flash drive, refer to the product page on the Yamaha website.

■ Error indications on the indicators

Front panel

Indicator	Display	Error description and corrective action
Power indicator	Blinking white	The protective circuit of this product has been activated. Unplug the power cord from the AC outlet, wait for at least 15 seconds, and then plug it in again. Then turn on the power. If the issue persists, contact an authorized service center.

After-Sales Service

For service requests or inquiries, please contact one of the following:

- Customers in Japan
  Please contact the retailer where the product was purchased, or the Repair Consultation Center listed in the enclosed Safety Guide.
- Customers outside Japan
  Please contact your nearest authorized Yamaha dealer or service center.
  https://manual.yamaha.com/audio/address_list/

SPECIFICATIONS

Supported devices and formats

Supported Bluetooth devices

For Bluetooth devices that can be connected to this product, see the following section.

- This product can connect to Bluetooth devices that support the A2DP and AVRCP profiles.
- Bluetooth connections and all functions and performance described in this guide are not guaranteed for all Bluetooth devices.

Supported USB devices

The following types of USB devices are supported by this product:

- USB flash drives formatted in FAT16, FAT32, or exFAT.
  Do not plug in any other USB devices.
- USB devices with an encryption function cannot be used.
- Yamaha does not guarantee compatibility with all USB devices.

Playable file formats (Network/USB)

For audio received via a network connection or played from a USB device, the playable file formats are shown in the following table.

File	Sampling frequency (kHz)	No. of quantization bits (bit)	Bit rate (kbps)	No. of channels	Gapless Playback Support
WAV*	32/44.1/48/88.2/96/176.4/192/352.8/384	16/24/32	-	1/2	○
MP3	32/44.1/48	-	8 to 320	1/2	-
WMA	32/44.1/48	-	8 to 320	1/2	-
MPEG-4 AAC	32/44.1/48	-	8 to 320	1/2	-
FLAC	32/44.1/48/88.2/96/176.4/192/352.8/384	16/24	-	1/2	○
ALAC	32/44.1/48/88.2/96	16/24	-	1/2	○
AIFF	32/44.1/48/88.2/96/176.4/192/352.8/384	16/24/32	-	1/2	○
DSD (DSF/DIFF)	2.8 MHz (DSD64)/5.6 MHz (DSD128)/11.2 MHz (DSD256)	1	-	1 (DIFF only)/2	-

* linear PCM format only.

- The playable file formats vary with the server software installed on the media server (PC/NAS). For more details, refer to the user's manual of the server software.
- Files protected by DRM (Digital Rights Management) cannot be played.

Trademarks and licenses

The following trademarks and licenses are used in this manual.

Works with Apple AirPlay

This Wireless Streaming Pre-Amplifier supports AirPlay. iOS 11.4 or later is required.

Use of the Works with Apple badge means that an accessory has been designed to work specifically with the technology identified in the badge and has been certified by the developer to meet Apple performance standards.

Apple, AirPlay, Apple TV, Apple Watch, iPad, iPad Air, iPad Pro, iPhone, Lightning, and iTunes are trademarks of Apple Inc., registered in the U.S. and other countries and regions.

In Japan, the iPhone trademark is used under license from Aiphone Co., Ltd.

App Store

App Store is a service mark of Apple Inc., registered in the U.S. and other countries.

Use your phone, tablet or computer as a remote control for Spotify. Go to spotify.com/connect to learn how.

Spotify

The Spotify Software is subject to third party licenses found here:

www.spotify.com/connect/third-party-licenses

roon READY

Being Roon Ready means that Yamaha uses Roon streaming technology, for an incredible user interface, simple setup, rock-solid daily reliability, and the highest levels of audio performance, without compromise.

HDMI™ HIGH-DEFINITION MULTIMEDIA INTERFACE

The terms HDMI, HDMI High-Definition Multimedia Interface, HDMI Trade Dress and the HDMI Logos are trademarks or registered trademarks of HDMI Licensing Administrator, Inc.

Android™ Google Play

Android, Google Play, and Google Cast are trademarks of Google LLC.

The Wi-Fi CERTIFIED™ Logo and Wi-Fi Protected Setup Logo are registered trademark of Wi-Fi Alliance®.

Wi-Fi, Wi-Fi CERTIFIED, Wi-Fi Protected Setup, WPA2 and WPA3 are trademarks or registered trademarks of Wi-Fi Alliance®.

The Bluetooth® word mark and logos are registered trademarks owned by Bluetooth SIG, Inc. and any use of such marks by Yamaha Corporation is under license. Other trademarks and trade names are those of their respective owners.

MusicCast is a trademark or registered trademark of Yamaha Corporation.

GPL/LGPL

This product utilizes GPL/LGPL open-source software in some sections. You have the right to obtain, duplicate, modify, and redistribute this open-source code only. For information on GPL/LGPL open source software, how to obtain it, and the GPL/LGPL license, refer to the Yamaha Corporation website

(https://download.yamaha.com/sourcecodes/musiccast/).

Licenses

For information on the licenses of the third-party software in this product, refer to the following.

http://(IP address of this product*)/licenses.html

* IP address of this product is checked with MusicCast Controller.

Specifications

The specifications of this product are as follows.

Basic Functions

Audio functions

- Tone control (BASS/TREBLE) ±6 dB/0.5 dB steps
- Volume 0 (Mute) to 100/1-step increments

Audio technologies

YPAO (automatic room calibration)

- PEQ
- Reflected Sound Control (R.S.C)
- YPAO Volume

Other

- Dialogue Level
- Monaural Downmix

HDMI Functions

HDMI Control (CEC/ARC Function)

- CEC Standby ON (Power synchronization with TV)
- Volume control (Up/Down/Mute) linked to TV volume
- eARC/ARC (Supported audio formats: 2 ch PCM 192 kHz 24-bit)

Network functions

Streaming services

- Server (PC client function)
- Net Radio (Internet radio)
- Podcasts
- MusicCast Link
- AirPlay
- Spotify
- TIDAL
- Roon Ready
- Qobuz Connect
- Google Cast

Wi-Fi function

- Wireless LAN standards — IEEE802.11 a/b/g/n/ac/ax
- Wireless frequency bands — 2.4 GHz/5 GHz
- Supported security protocols — WPA2-PSK, WPA3-SAE
- Supports WPS (Wi-Fi Protected Setup)
- Supports WAC (Wireless Accessory Configuration)

Bluetooth Functions

- Specification — Bluetooth Ver. 5.3
- Wireless frequency — 2.4 GHz
- Wireless output — Bluetooth Class 1
- Supported profiles — A2DP, AVRCP
- Supported codecs — SBC, AAC
- Content protection — SCMS-T

Input/Output Jacks

Audio input jacks

- Analog audio
  - Stereo (RCA) × 1
- Digital audio
  (PCM 2-channel only, supported fs: 32 kHz/44.1 kHz/48 kHz/88.2 kHz/96 kHz/176.4 kHz/192 kHz)
  - Optical × 1

Audio output jacks (PRE OUT) (volume adjustable)

- Analog audio
  - Stereo (RCA) × 1
  - Subwoofer (RCA) × 1
- Digital audio
  (2-channel PCM, supported sampling frequency: 48 kHz)
  - Optical × 1
  - Coaxial × 1

USB jack

- USB (Type-A) × 1

NETWORK jack

- NETWORK (wired) × 1 (100Base-TX/10Base-T)

HDMI jack

- HDMI × 1

Other jacks

- Trigger output jack × 1
- YPAO microphone jack × 1
- Remote input jack × 1

Audio Section

Total harmonic distortion (AES-17, 20 kHzLPF, 20 Hz to 20 kHz)	
• PRE OUT	0.003% THD
Frequency response (1 kHz +0/-3 dB)	
• PRE OUT (OPT/HDMI/USB IN)	10 Hz to 38 kHz
PRE OUT (AUX IN)	10 Hz to 38 kHz
Signal to noise ratio (AES-17, 20 kHzLPF, IHF-A)	
• OPT/USB/Bluetooth IN	112 dB
• AUX IN	98 dB
Rated Output Voltage/Output Impedance	
• PRE OUT L/R (1 kHz)	2.0 V/700 Ω
• PRE OUT SUBWOOFER (30 Hz L=R)	4.0 V/470 Ω
Maximum output level	
• PRE OUT 0.9% THD Preamp mode/Player mode (Gain offset: +6 dB)	4.0 V
Volume adjustment	
• Supported output	PRE-OUT, COAX OUT, OPT OUT
• Adjustable range	0 (Mute) to 100 (Maximum)/1-step increments
Equalizer characteristics	
• Bass	
Adjustable range	±6 dB/0.5 dB steps
Center frequencies	350 Hz
• Treble	
Adjustable range	±6 dB/0.5 dB steps
Center frequencies	3.5 kHz
Low-frequency crossover	
• Cutoff frequency	40 Hz/60 Hz/80 Hz/90 Hz/100 Hz/ 110 Hz/120 Hz/160 Hz/200 Hz
• Low-pass filter	24 dB/oct.
Maximum allowable input	
• 1 kHz 0.5% THD AUX IN	2.4 V or more

General

Power Supply	
• [Models for U.S.A. and Canada]	AC 120 V, 60 Hz
• [Model for Australia]	AC 230 to 240 V, 50 Hz
• [Models for U.K. and Europe]	AC 230 V, 50 Hz
Power consumption	20 W
Standby power consumption	
• HDMI Control On	
• Network Standby Off, Bluetooth Standby Off	2.0 W
• HDMI Control Off	
• Network Standby On (Wired), Bluetooth Standby On	2.0 W
Network Standby On (Wireless), Bluetooth Standby On	2.0 W
• Network Standby On (Wired), Bluetooth Standby Off	2.0 W
Network Standby On (Wireless), Bluetooth Standby Off	2.0 W
• Network Standby Off, Bluetooth Standby Off	0.5 W
Dimensions (W × H × D)	220 × 73 × 267 mm (8-5/8" x 2-7/8" x 10-1/2")
Reference dimensions (W × H × D)	
• With antenna upright	220 × 155 × 267 mm (8-5/8" x 6-1/8" x 10-1/2")
Weight	1.9 kg (4.2 lbs)

NOTE

This document is based on the latest specifications at the time of publication. The latest version is available for download from the Yamaha website.

About network functions

Other network functions

In addition to the functions described in this guide, this product is equipped with the following network-enabled functions.

Functions

- Web Settings
- Simple Device Discovery Protocol (SDDP) support

■ Web Settings

Some functions of this product can be configured using a web browser.

On the Web Settings screen, you can change settings and view license information for this product. From the Settings menu of the dedicated app “MusicCast Controller”, select “External Features/Advanced Settings”.

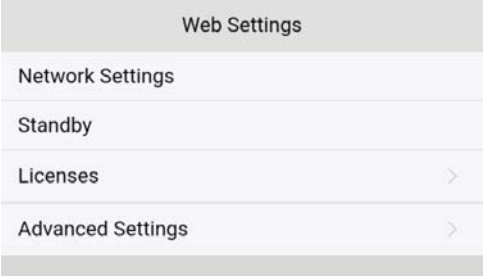

On the Web Settings screen, you can view and change the following settings.

Network Settings

Configure the network connection settings (wired/wireless, DHCP/IP address, etc.).

Standby

This is used to set Network Standby mode (Off, On, Auto) and Bluetooth Standby mode (Off, On).

Licenses

This displays the texts for various licenses.

Advanced Settings

This allows configuration of more advanced settings and viewing of more detailed information.

■ Simple Device Discovery Protocol (SDDP) support

This product supports the Simple Device Discovery Protocol (SDDP). SDDP is an automatic device discovery protocol used in home automation systems. In a Control4 system, when a new compatible device is connected to the network, it is automatically detected and identified, simplifying setup operations.

For more information about Control4, visit the following URL.

https://www.control4.com/

How to disable wireless functions

This product is equipped with the following wireless functions. These functions can be disabled by changing the settings.

Functions

- Wi-Fi
- Bluetooth

NOTE

- Normally, there is no need to change these settings. Change the settings only when you want to disable wireless communication.
- The Bluetooth function cannot be disabled independently.

■ How to disable the Wi-Fi/Bluetooth function

Follow the steps below to set the wireless switch on the rear panel of this product to the desired position.

1 Turn off (set to standby) the power of the product.

2 Unplug the power cord from the AC outlet.

3 Set the wireless switch to the desired position.

Refer to the “Wireless switch settings table” below.

4 Plug the power cord into an AC outlet, and then turn on the power.

This completes the setup.

Wireless switch settings table

Switch position	Wi-Fi	Bluetooth
When the switch is set to the right	Enabled	Enabled
When the switch is set to the center	Disabled	Enabled
When the switch is set to the left	Disabled	Disabled

Yamaha Global Site
https://www.yamaha.com/

Yamaha Downloads
https://download.yamaha.com/

© 2026 Yamaha Corporation

Published 10/2026 NV-C0

AV25-0049