YAMAHA

TG

NS-F700

Speaker
Enceinte

OWNER'S MANUAL
MODE D'EMPLOI
BEDIENUNGSANLEITUNG
MANUAL DE INSTRUCCIONES
使 用 说 明 书
ИНСТРУКЦИЯ ПО ЭКСПЛУАТАЦИИ

Thank you for selecting this YAMAHA product.

PRECAUTIONS

Read this before using the speaker.

- To assure the finest performance, please read this manual carefully. Keep it in a safe place for future reference.
- Install the speaker in a cool, dry, clean place - away from windows, heat sources, sources of excessive vibration, dust, moisture and cold. Avoid sources of electrical noise (transformers, motors). To prevent fire or electrical shock, do not expose this unit to rain or water.
- To prevent the enclosure from warping or discoloring, do not place the speaker where it will be exposed to direct sunlight or excessive humidity.
- Do not place the following objects on the speaker:
  Glass, china, small metallic etc.
  If glass, etc., falls as a result of vibration and breaks, it may cause personal injury.
  A burning candle, etc.
  If the candle falls as a result of vibrations, it may cause fire and personal injury.
  A vessel with water in it
  If the vessel falls as a result of vibrations and water spills, it may cause damage to the speaker, and/or you may get an electric shock.
- Do not place the speaker where foreign material such as dripping water. It might cause fire, damage to this unit, and/or personal injury.
- Do not place the speaker where it is liable to be knocked over or struck by falling objects. Stable placement will also ensure better sound performance.
- Placing the speaker on the same shelf or rack as the turntable can result in acoustical feedback.
- Never put a hand or a foreign object into the port located on the rear of the speaker, as this might cause personal injury and/or damage to the speaker.
- When moving the speaker, do not hold the port, as it might cause personal injury and/or damage to the speaker.
- Any time you notice distortion, reduce the volume control on your amplifier. Never allow your amplifier to be driven into "clipping." Otherwise the speaker may be damaged.
- When using an amplifier with a rated output power higher than the nominal input power of the speaker, care should be taken never to exceed the speaker's maximum input.
- Do not attempt to clean the speaker with chemical solvents, as this might damage the finish. Use a clean, dry cloth.
- Do not attempt to modify or repair the speaker. Contact qualified YAMAHA service personnel when any service is needed. The cabinet should never be opened for any reasons.
- **Secure placement and installation is the owner's responsibility. YAMAHA shall not be liable for any accident caused by improper placement or installation of speakers.**

Information for Users on Collection and Disposal of Old Equipment



This symbol on the products, packaging, and/or accompanying documents means that used electrical and electronic products should not be mixed with general household waste.

For proper treatment, recovery and recycling of old products, please take them to applicable collection points, in accordance with your national legislation and the Directives 2002/96/EC.

By disposing of these products correctly, you will help to save valuable resources and prevent any potential negative effects on human health and the environment which could otherwise arise from inappropriate waste handling.

For more information about collection and recycling of old products, please contact your local municipality, your waste disposal service or the point of sale where you purchased the items.

[For business users in the European Union]

If you wish to discard electrical and electronic equipment, please contact your dealer or supplier for further information.

[Information on Disposal in other Countries outside the European Union]

This symbol is only valid in the European Union. If you wish to discard these items, please contact your local authorities or dealer and ask for the correct method of disposal.

PRECAUTIONS WHEN POSITIONING THE SPEAKERS

The speaker is constructed with the majority of the weight located in its upper portion, and is thus susceptible to falling over if proper care is not taken to insure its stability. If the speaker falls over, it may damage the speaker or be the cause of injury (or even death) to person and/or damage to personal property.



For safe and proper use of the speaker:

- Position the speaker in a location that is solid, level, smooth, and low (with respect to the floor).
- Do not push or apply pressure to the side of the speaker when moving, or lean objects against the side of the speaker.
- Do not sit on or set objects on top of the speaker.

Vibrations or jolts associated with earthquakes and other phenomena or activities may cause the speaker to fall over. For safety reasons, using commercially available products that increase stability of the speaker is recommended (metal fittings or chains, etc.).

Use the stands included with the speaker to increase stability:

Be sure to use the stands regardless of where the speaker is positioned. Attaching the stands included with the speaker reinforces the base of the speaker so as not to fall over.

Please be cautioned that even though the stands are connected, this does not guarantee that the speaker will not fall over.

SUPPLIED ACCESSORIES

After unpacking, check that the following parts are contained.

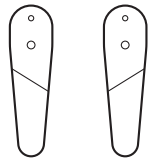

(L) (R)
Stand (R × 2, L × 2)



Screw
(6mm (1/4")) × 4



Wood screw
(4mm (3/16")) × 4



Pad × 4

ATTACHING THE STANDS

When placing the speakers, be sure to use the stands to increase stability.

Notes

- **Make sure to have another person support it.**

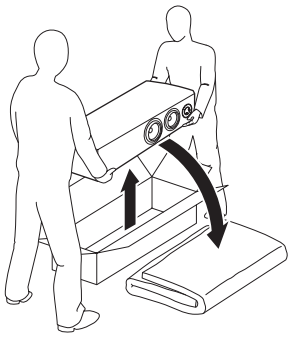

- **Pay extra attention to avoid scratching on the speaker's surface.**
- **Place the speaker on a supporting surface (height of 7 cm (2-3/4") or more). Use a blanket or a cushion on it to avoid scratching.**
- **The provided stands are in two types. Two stands are for the right side and others are for the left side. Attach each stand to the proper position on the bottom of the speaker by following the figure below.**
- **To attach the stands to the speaker, be sure to lay down the speaker with the side facing up.**

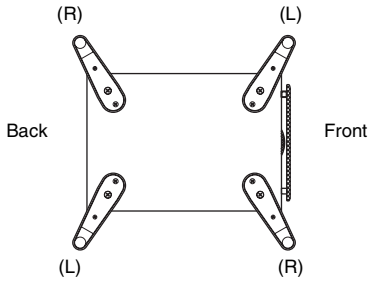

View from the bottom of the speaker

Use the 8 specified holes located on the base of the speaker.

■Procedure

1. Put the 6 mm (1/4") screw through the large hole in the stand, and screw it into the speaker at one of the outside holes in the base of the speaker.
   At this time, screw it in loosely so that the stand can still be moved.
2. Put the 4 mm (3/16") wood screw through the other hole in the stand, and screw it into the other hole in the base of the speaker.
3. Tighten both of the screws firmly.
4. Attach a pad to the bottom of the end portion of the stand.
5. Attach the other stands to the other corners of the base of the speaker in the same way and confirm that all 4 stands have been firmly attached.

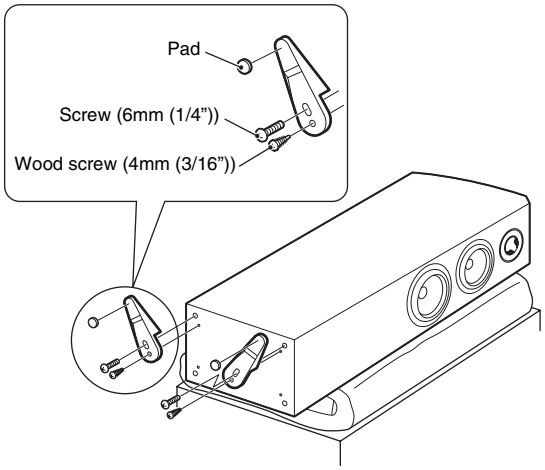

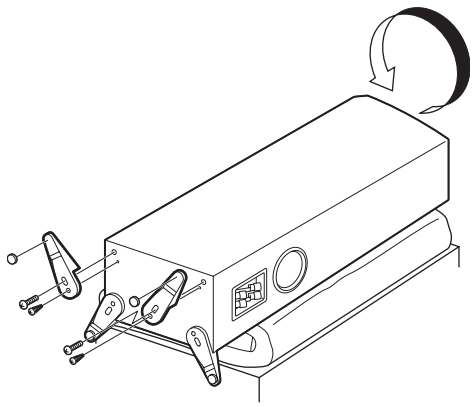

Note

Be carefully not to apply force to the side of the speaker, otherwise the speaker may fall causing damage to the speaker or personal injury.

English

PLACING THE SPEAKERS

■Using as 2ch stereo speakers

Better stereo images will be obtained when the speakers are slightly angled in towards the listeners.

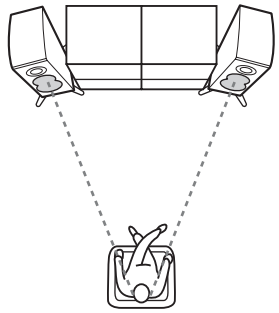

■Using as front speakers in a multi channel system

Position the speakers on both sides of the TV. The positioning of speakers is important, since this dictates the overall sound quality of the multi channel system. Set up the speakers on the basis of your listening position by following the owner's manual supplied with your amplifier.

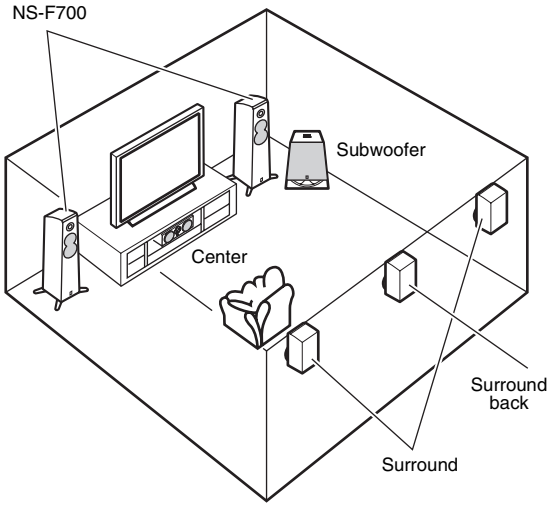

Notes

- **Placing this unit too close to a CRT TV set might impair picture color or create a buzzing noise. Should this happen, move the speaker away (more than 20 cm (7-7/8")) from the TV set.**
- **To avoid accidents resulting from tripping over loose speaker cables, fix them to the floor.**

CONNECTIONS TO YOUR AMPLIFIER

This speaker system is capable of standard connections and bi-wire connection. Before making connections, make sure that the amplifier is switched off.

Standard connections

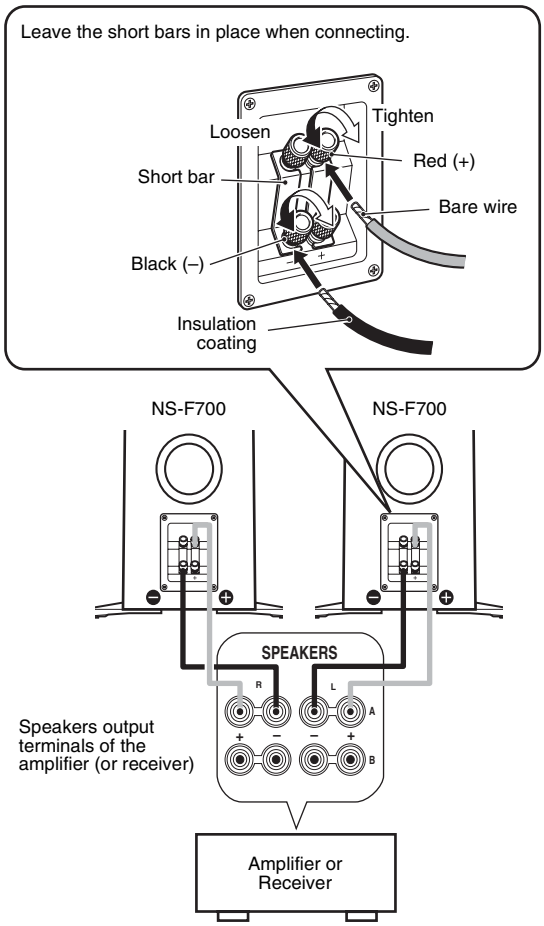

- Connect the screw-type input terminals at the rear of the speakers to the speaker output terminals of the amplifier (or receiver) with the speaker cable.
- Connect the (+) terminals on the amplifier (or receiver) to the (+) terminal of each speaker, making sure to confirm the color-coded wire of the cable at each end. Use the other wire of the cable to connect the (–) terminals of the components.
- Connect one speaker to the left (marked L) terminals of your amplifier, and another speaker to the right (marked R) terminals, making sure not to reverse the polarity (+, –). If one speaker is connected with reversed polarity the sound will be unnatural and lack bass.

■How to connect

1 Loosen the knob.

2 Remove 10 mm (3/8”) of insulation from each end of the cables, and twist the exposed conductors together neatly and tightly, as shown below.

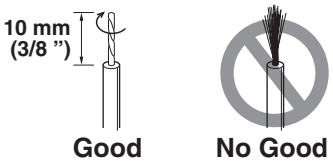

3 Insert the bare wire.

4 Tighten the knob and secure the cables.
Test the firmness of the connection by pulling lightly on the cables at the terminal.

Notes

- **Do not let the bare speaker wires touch each other as this could damage the speaker or the amplifier, or both.**
- **Do not insert the insulation into the hole. Sound may not be produced.**

Bi-wire connection

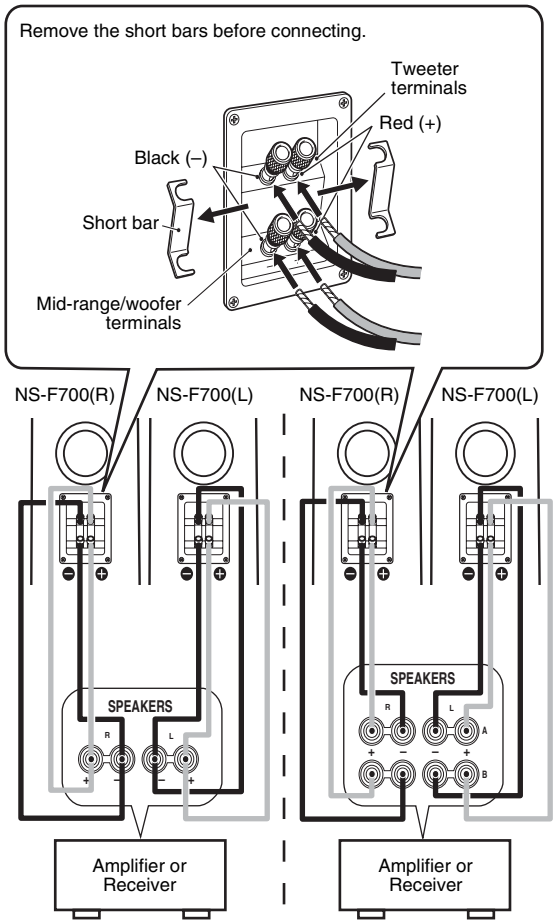

Both **SPEAKERS A** and **B** should be selected.

■About Bi-Wire Connection

This speaker system is capable of bi-wire connection. To connect the speaker to the output terminals of the amplifier (or receiver), two pairs of cables for each of mid-range/woofer and tweeter used instead of standard connections.

This type of connection decreases the modulation distortion caused by electric resistance of the cables and driving current of the speakers.

Consequently, purer sound quality can be expected.

To utilize bi-wire connection, remove the short bars from the terminals first, and then connect the mid-range/woofer and tweeter to the amplifier separately using two pairs of cables.

■When using a banana plug

Note

Do not take off this cover unless using a banana plug.

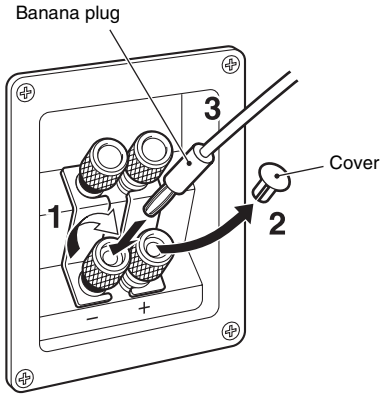

1 Tighten the terminal knob.

2 Remove the cover by pulling it toward you.

3 Simply insert the banana plug into the terminal.

Note

Use a suitable instrument to remove the cover. Removing it with your bare hands may hurt your fingertips.

English

ATTACHING THE FRONT COVER

The speaker and the front cover are packed separately. To attach the front cover, line up the projections (magnets) on the reverse side of the front cover with their corresponding screw heads on the speaker.

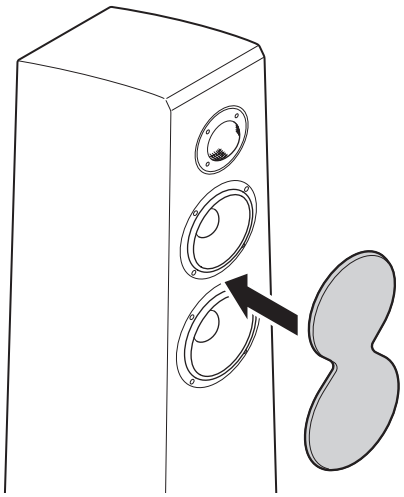

Notes

- **When removing the cover, be careful that you don't touch the drive units, and don't exert excessive force with any tools.**
- **There are magnets on the reverse side of the front cover. Do not place the front cover close to objects that might be affected by magnets, such as CRT TV, clock, magnetic card, diskette, etc., after removing it.**

SPECIFICATIONS

Type .....3-way bass reflex speaker system
Non-Magnetic shielding type
Driver .....16 cm (6.5") cone woofer × 1
Advanced PMD
13 cm (5") cone mid-range × 1
Advanced PMD
3 cm (1") aluminum dome tweeter
DC diaphragm
Impedance ..... 6 Ω
Frequency Response ..... 45 Hz to 50 kHz (-10 dB)
Nominal Input Power..... 40 W
Maximum Input Power ..... 160 W
Sensitivity ..... 89 dB/2.83 V/m
Crossover Frequency .....700 Hz/4 kHz
Dimensions (with stands)(W × H × D)
.. 354 × 1012 × 374 mm (13-15/16" × 39-13/16" × 14-3/4")
Weight.....25 kg (55 lbs. 2 oz.)

- Specifications subject to change without notice due to product improvements.
- Care should be taken not to exceed the input power values noted above.
- A speaker cable is not included with this model.

Taking care of the speaker

When you wipe this unit, do not use chemical solvents (e.g., alcohol or thinners, etc.): this might damage the finish. Use a clean, dry cloth. For difficult soils, dampen a soft cloth in detergent diluted with water, wring it out, and then wipe with the cloth.

Limited Guarantee for European Economic Area (EEA) and Switzerland

Thank you for having chosen a Yamaha product. In the unlikely event that your Yamaha product needs guarantee service, please contact the dealer from whom it was purchased. If you experience any difficulty, please contact Yamaha representative office in your country. You can find full details on our website (**http://www.yamaha-hifi.com/** or **http://www.yamaha-uk.com/** for U.K. resident).

The product is guaranteed to be free from defects in workmanship or materials for a period of two years from the date of the original purchase. Yamaha undertakes, subject to the conditions listed below, to have the faulty product or any part(s) repaired, or replaced at Yamaha's discretion, without any charge for parts or labour. Yamaha reserves the right to replace a product with that of a similar kind and/or value and condition, where a model has been discontinued or is considered uneconomic to repair.

Conditions

1. The original invoice or sales receipt (showing date of purchase, product code and dealer's name) MUST accompany the defective product, along with a statement detailing the fault. In the absence of this clear proof of purchase, Yamaha reserves the right to refuse to provide free of charge service and the product may be returned at the customer's expense.
2. The product MUST have been purchased from an AUTHORISED Yamaha dealer within the European Economic Area (EEA) or Switzerland.
3. The product must not have been the subject of any modifications or alterations, unless authorised in writing by Yamaha.
4. The following are excluded from this guarantee:
   a. Periodic maintenance and repair or replacement of parts due to normal wear and tear.
   b. Damage resulting from:
      (1) Repairs performed by the customer himself or by an unauthorised third party.
      (2) Inadequate packaging or mishandling, when the product is in transit from the customer. Please note that it is the customer's responsibility to ensure the product is adequately packaged when returning the product for repair.
      (3) Misuse, including but not limited to (a) failure to use the product for its normal purpose or in accordance with Yamaha's instructions on the proper use, maintenance and storage, and (b) installation or use of the product in a manner inconsistent with the technical or safety standards in force in the country where it is used.
      (4) Accidents, lightning, water, fire, improper ventilation, battery leakage or any cause beyond Yamaha's control.
      (5) Defects of the system into which this product is incorporated and/or incompatibility with third party products.
      (6) Use of a product imported into the EEA and/or Switzerland, not by Yamaha, where that product does not conform to the technical or safety standards of the country of use and/or to the standard specification of a product sold by Yamaha in the EEA and/or Switzerland.
      (7) Non AV (Audio Visual) related products.
      (Products subject to "Yamaha AV Guarantee Statement" are defined in our website at **http://www.yamaha-hifi.com/** or **http://www.yamaha-uk.com/** for U.K. resident.)
5. Where the guarantee differs between the country of purchase and the country of use of the product, the guarantee of the country of use shall apply.
6. Yamaha may not be held responsible for any losses or damages, whether direct, consequential or otherwise, save for the repair or replacement of the product.
7. Please backup any custom settings or data, as Yamaha may not be held responsible for any alteration or loss to such settings or data.
8. This guarantee does not affect the consumer's statutory rights under applicable national laws in force or the consumer's rights against the dealer arising from their sales/purchase contract.

УСТАНОВКА ПЕРЕДНЕЙ КРЫШКИ

Передняя крышка запакована отдельно от акустической системы. Чтобы установить переднюю крышку, совместите выступающие части (магниты) на задней части передней крышки с соответствующими головками винтов на акустической системе.

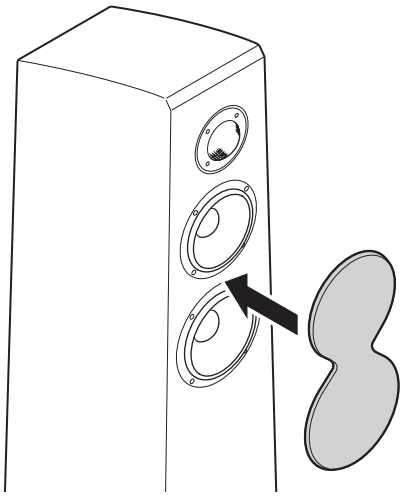

Примечания

- **При снятии крышки не касайтесь динамиков и не прилагайте излишних усилий в случае использования инструментов.**
- **С обратной стороны передней крышки установлены магниты. После снятия передней крышки не располагайте ее близко к предметам, чувствительным к магнитному полю, например телевизор, часы, магнитные карты, дискеты и т.д.**

ТЕХНИЧЕСКИЕ ХАРАКТЕРИСТИКИ

Тип ..... 3-полосная басоотражающая акустическая система
Немагнитный тип защиты
Динамики ..... 1 низкочастотный динамик конического типа диаметром 16 см
Усовершенствованная технология PMD
1 среднечастотный динамик конического типа диаметром 13 см
Усовершенствованная технология PMD
высокочастотный динамик с алюминиевым куполом диаметром 3 см
мембрана постоянного тока
Импеданс ..... 6 Ω
Частотная характеристика ..... 45 Гц – 50 кГц (-10 дБ)
Номинальная входная мощность ..... 40 Вт
Максимальная входная мощность ..... 160 Вт
Чувствительность ..... 89 дБ/2,83 В/м
Частота разделения каналов ..... 700 Гц/4 кГц
Габариты (со стойками)(Ш × В × Г)
..... 354 × 1012 × 374 мм
Вес ..... 25 кг

- Технические характеристики могут изменяться без предварительного уведомления из-за усовершенствования продукта.
- Не превышайте указанных выше значений входной мощности.
- Акустический кабель не входит в комплект поставки.

Уход за акустической системой

Не применяйте химические составы для очистки акустической системы (например, спирт, растворители и т.д.): это может повредить отделочное покрытие. Используйте чистую сухую ткань. Для устранения сложных загрязнений смочите мягкую ткань в разбавленном водой чистящем средстве, отожмите ее и протрите место загрязнения.

Информация для пользователей по сбору и утилизации старой аппаратуры



Этот знак на аппаратуре, упаковках и в сопроводительных документах указывают на то, что подержанные электрические и электронные приборы не должны выбрасываться вместе с обычным домашним мусором.

Для правильной обработки, хранения и утилизации старой аппаратуры, пожалуйста сдавайте их в соответствующие сборные пункты, согласно вашему национальному законодательству и директив 2002/96/EC.

При правильном отделении этих товаров, вы помогаете сохранять ценные ресурсы и предотвращать вредное влияние на здоровье людей и окружающую среду, которое может возникнуть из-за несоответствующего обращения с отходами.

За более подробной информацией о сборе и утилизации старых товаров пожалуйста обращайтесь в вашу локальную администрацию, в ваш приёмный пункт или в магазин где вы приобрели эти товары.

[Для представителей компаний в Европейском Союзе]

Если вы хотите избавиться от электрической или электронной аппаратуры, пожалуйста обратитесь к вашему продавцу или поставщику за полной информацией.

[Информация по утилизации в других странах за пределами Европейского Союза]

Этот знак действителен только на территории Европейского Союза. Если вы хотите избавиться от этих предметов, пожалуйста обратитесь в вашу локальную администрацию или продавцу и спросите о правильном способе утилизации.

YAMAHA

©2008 Yamaha Corporation All rights reserved.

YAMAHA CORPORATION
Printed in Indonesia WP15000-1